1 YEAR WARRANTY

OMEGA®

User's Guide

Shop online at omega.com℠

e-mail: info@omega.com
For latest product manuals:
www.omegamanual.info

FP-319
Flow Wet-Tap Assembly

omega.com info@omega.com

Servicing North America:

U.S.A. Headquarters:

Omega Engineering, Inc.
Toll-Free: 1-800-826-6342 (USA & Canada only)
Customer Service: 1-800-622-2378 (USA & Canada only)
Engineering Service: 1-800-872-9436 (USA & Canada only)
Tel: (203) 359-1660 Fax: (203) 359-7700
e-mail: info@omega.com

For Other Locations Visit omega.com/worldwide

OMEGA FP-319 Flow Wet-Tap Assembly

SAFETY INSTRUCTIONS

1. The FP-319 Flow Wet-Tap Valve may only be installed into, and removed from, non-pressurized systems (0 psig).
2. The pressure must be reduced to 25 psi when removing or installing the sensor and must maintain 25 psi or lower while the sensor is removed.
3. Stay clear of sensor stroke area and safety cable during sensor removal.
4. Confirm chemical compatibility before use.
5. Do not exceed maximum temperature/pressure specifications.
6. Wear safety goggles or faceshield during installation/service.
7. Do not alter product construction.

Failure to follow safety precautions may result in severe personal injury!

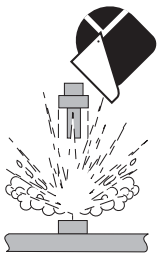

1. Specifications

Materials

Body:	PVC
Ball seat:	PTFE
O-rings:	FPM

Standards

- Manufactured under ISO 9001 and 14001

Fluid Conditions

Pressure/Temperature Ratings:

- 7 bar max. @ -18 to 20 °C (100 psi max. @ 0 to 68 °F)
- 1.4 bar max. @ 66 °C (20 psi max. @ 150 °F)

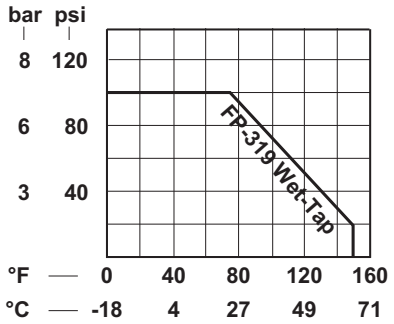

Dimensions

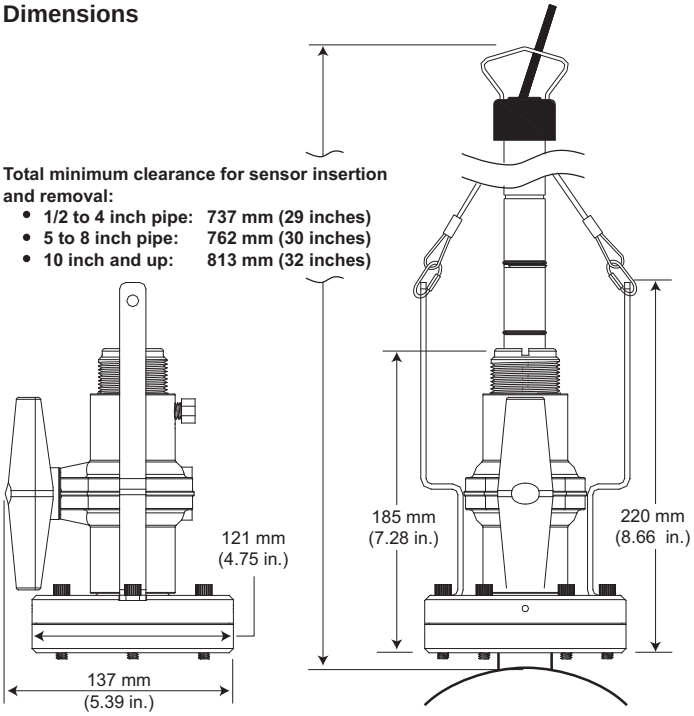

2. Wet-Tap Valve Installation

The OMEGA FP-319 Flow Wet-Tap Assembly attaches directly to OMEGA installation fittings to enable flow sensor removal without system shutdown. It consists of a flange and support plate which thread onto the pipe fitting insert, and a PVC ball valve through which an extended length flow sensor is inserted into the pipe.

Caution: The FP-319 Flow Wet-Tap Valve may only be installed into, and removed from, non-pressurized systems (0 psig).

Procedure

1. Remove six hex nuts and bolts from the Wet-Tap flange. Separate the support plate from the main assembly. Be sure that the Viton O-ring is properly seated in the support plate groove.
2. Apply sealant to the pipe fitting insert threads to prevent leaks.
3. Screw support plate onto pipe fitting insert (O-ring side facing up). It must be threaded completely down until the notches at the top of the pipe fitting insert are exposed.
4. Mount the main Wet-Tap Assembly on the support plate. Make certain the alignment keys on the flange mate with the notches on the pipe fitting insert.
5. Loosen support plate (holding the main Wet-Tap Assembly in place) until it resists slightly. Loosen an additional 1/4-turn to seat O-ring.
6. Replace the six hex nuts and bolts to secure the Wet-Tap Assembly in place. Adjust the support plate position as necessary to align screws.
7. Check the pressure relief plug on Wet-Tap Assembly. It must be closed finger tight to prevent leaks.
8. Close ball valve by turning the handle to the fully closed position (parallel with pipe).

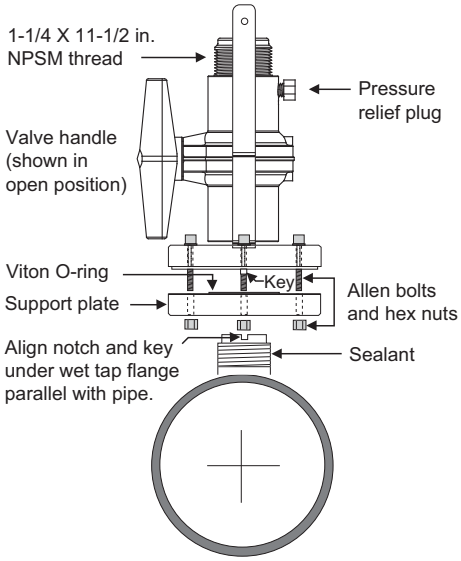

3. Flow Sensor Insertion/Removal

To insert the flow sensor:

1. Lubricate the sensor O-rings with a lubricant compatible with your process and the sensor materials of construction. Do not use petroleum based lubricants that will attack the O-rings.

2. Carefully insert the sensor into the FP-319 valve assembly until the first two O-rings seat inside the bore (Figure 1).
   - **Do not damage the rotor on closed ball valve.**

3. Using the clamps, attach the sensor safety cable to the FP-319 assembly brackets (hand tighten only).

4. Pull the flow sensor upward to remove slack in the safety cables (Figure 2).

WARNING: Safety cables are factory installed at precise length. DO NOT attempt to service or replace safety cables.

WARNING: System pressure must be 25 psi or less prior to sensor insertion or removal.

5. Open the ball valve (Figure 2).

6. Push the flow sensor into the FP-319 assembly with a twisting motion.
   - Turn the sensor so the arrows on the black conduit cap point in the direction of flow.
   - When properly aligned the sensor bale will be parallel with the pipe (Figure 3).

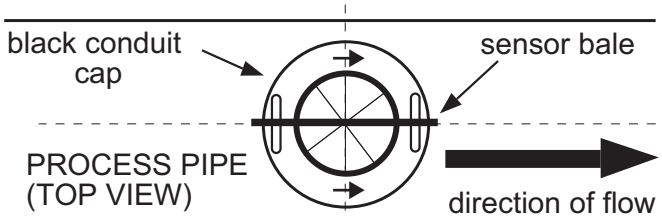

Figure 3

7. Align the tabs under the sensor cap with the notches on the fitting insert and tighten the sensor cap (Figure 4).
   - HAND TIGHTEN ONLY. DO NOT use any tools that may damage plastic parts.

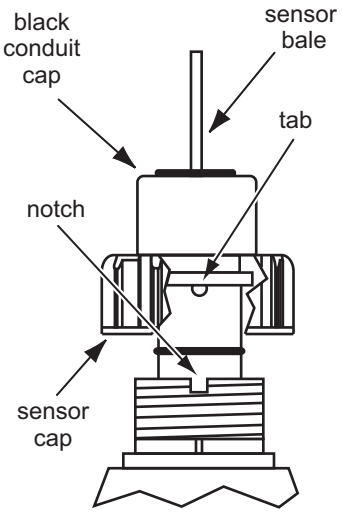

Figure 4

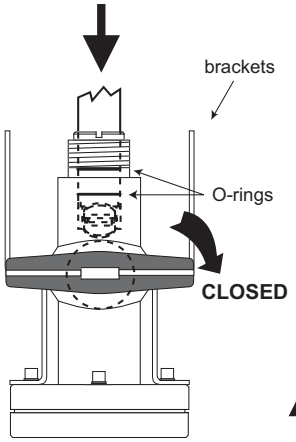

Figure 1

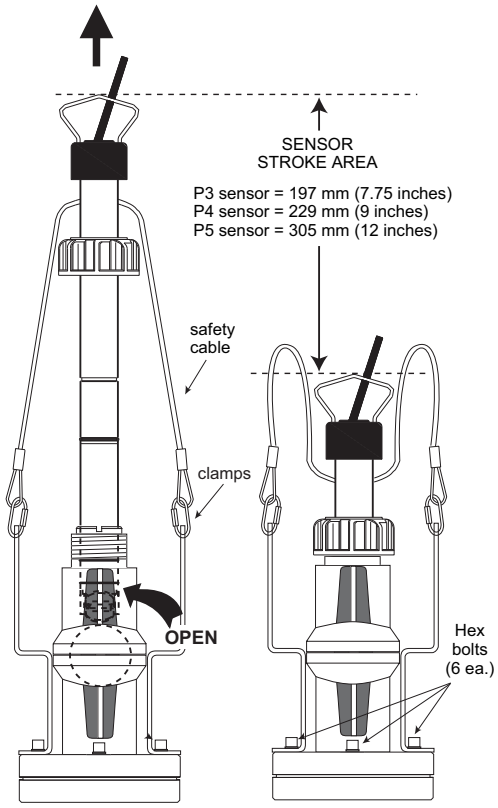

Figure 2

To remove the flow sensor:

WARNING: System pressure must be 25 psi or less prior to flow sensor insertion or removal. Stay clear of sensor stroke area and safety cable during sensor removal.

WARNING: Check the six (6) hex bolts (Figure 2) prior to unscrewing the sensor cap. **If bolts are loose, tighten securely before proceeding.**

1. Unscrew the sensor cap. DO NOT use any tools that may damage plastic parts.

2. Carefully pull the flow sensor upward with a twisting motion until the safety lanyards are fully extended (Figure 2).

3. Close the ball valve (Figure 1).

4. Loosen the relief plug to depressurize the sensor area.

5. Disconnect the sensor safety cable clamps from the FP-319 assembly brackets.

6. The sensor can now be safely removed.

4. OMEGA Fittings

Type	Description
Plastic tees 	• 0.5 to 4 inch versions • PVC or CPVC
PVC Glue-on Saddles 	• Available in 10 and 12 inch sizes only • Cut 2-1/2 inch hole in pipe • Weld in place using solvent cement
PVC Saddles 	• 2 to 4 inch, cut 1-7/16 inch hole in pipe • 6 to 8 inch, cut 2-1/4 inch hole in pipe
Iron Strap-on saddles 	• 2 to 4 inch, cut 1-7/16 inch hole in pipe • Over 4 inch, cut 2-1/4 inch hole in pipe • Special order over 12 inch

Type	Description
Carbon steel & stainless steel threaded tees 	• 0.5 to 2 inch versions
Carbon steel & stainless steel Weld-on Weldolets 	• 2 to 4 inch, cut 1-7/16 inch hole in pipe • Over 4 inch, cut 2-1/4 inch hole in pipe • See section 4 below for details
Metric PVC-U Saddle 	• For pipes DN 65 to 200 mm • Requires a 30 mm diam. hole in the pipe
Metric Union Fitting 	• For pipes from DN 15 to 50 mm • PP or PVDF

Consult the K-Factor section of the OMEGA flow sensor instruction manual for a complete listing of installation fittings.

5. H-Dimensions

The plastic sensor insert in the Weldolet or Brazolet fitting MUST be removed before the welding process. When reinstalled, it is important that the insert be threaded to the proper height ("H" dimension).

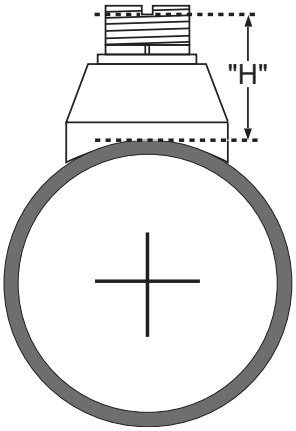

Part Number Carbon Steel	"H" dimension		Part Number		"H" dimension	
	inches	mm	Stainless Steel	Copper/ Bronze	inches	mm
FP-5325CS	2.33	59.18	FMG-5325	FP-5325BR	2.33	59.18
FP-5330CS	2.32	58.92	FMG-5330	FP-5330BR	2.32	58.92
FP-5340CS	2.30	58.42	FMG-5340	FP-5340BR	2.30	58.42
FP-5350CS	3.09	78.48	FMG-5350	FP-5350BR	3.09	78.48
FP-5360CS	2.96	75.18	FMG-5360	FP-5360BR	2.96	75.18
FP-5380CS	2.73	69.34	FMG-5380	FP-5380BR	2.73	69.34
FP-5381CS	5.48	139.19	FMG-5381	FP-5381BR	5.48	139.19
FP-5382CS	5.25	133.35	FMG-5382	FP-5382BR	5.25	133.35

6. Ordering Information

Part Number	Description
FP-319	PVC wet-tap valve (sensor not included)
FMK-515-3P3	Polypro extended length paddlewheel sensor (0.5 to 4 in.)
FMK-515-3P5	Polypro extended length paddlewheel sensor (10 to 36 in.)
FMK-2536-3P3	Polypro extended length low flow paddlewheel sensor (0.5 to 4 in.)

WARRANTY/DISCLAIMER

OMEGA ENGINEERING, INC. warrants this unit to be free of defects in materials and workmanship for a period of **13 months** from date of purchase. OMEGA's WARRANTY adds an additional one (1) month grace period to the normal **one (1) year product warranty** to cover handling and shipping time. This ensures that OMEGA's customers receive maximum coverage on each product.

If the unit malfunctions, it must be returned to the factory for evaluation. OMEGA's Customer Service Department will issue an Authorized Return (AR) number immediately upon phone or written request. Upon examination by OMEGA, if the unit is found to be defective, it will be repaired or replaced at no charge. OMEGA's WARRANTY does not apply to defects resulting from any action of the purchaser, including but not limited to mishandling, improper interfacing, operation outside of design limits, improper repair, or unauthorized modification. This WARRANTY is VOID if the unit shows evidence of having been tampered with or shows evidence of having been damaged as a result of excessive corrosion; or current, heat, moisture or vibration; improper specification; misapplication; misuse or other operating conditions outside of OMEGA's control. Components in which wear is not warranted, include but are not limited to contact points, fuses, and triacs.

OMEGA is pleased to offer suggestions on the use of its various products. However, OMEGA neither assumes responsibility for any omissions or errors nor assumes liability for any damages that result from the use of its products in accordance with information provided by OMEGA, either verbal or written. OMEGA warrants only that the parts manufactured by the company will be as specified and free of defects. OMEGA MAKES NO OTHER WARRANTIES OR REPRESENTATIONS OF ANY KIND WHATSOEVER, EXPRESSED OR IMPLIED, EXCEPT THAT OF TITLE, AND ALL IMPLIED WARRANTIES INCLUDING ANY WARRANTY OF MERCHANTABILITY AND FITNESS FOR A PARTICULAR PURPOSE ARE HEREBY DISCLAIMED. LIMITATION OF LIABILITY: The remedies of purchaser set forth herein are exclusive, and the total liability of OMEGA with respect to this order, whether based on contract, warranty, negligence, indemnification, strict liability or otherwise, shall not exceed the purchase price of the component upon which liability is based. In no event shall OMEGA be liable for consequential, incidental or special damages.

CONDITIONS: Equipment sold by OMEGA is not intended to be used, nor shall it be used: (1) as a "Basic Component" under 10 CFR 21 (NRC), used in or with any nuclear installation or activity; or (2) in medical applications or used on humans. Should any Product(s) be used in or with any nuclear installation or activity, medical application, used on humans, or misused in any way, OMEGA assumes no responsibility as set forth in our basic WARRANTY/DISCLAIMER language, and, additionally, purchaser will indemnify OMEGA and hold OMEGA harmless from any liability or damage whatsoever arising out of the use of the Product(s) in such a manner.

RETURN REQUESTS/INQUIRIES

Direct all warranty and repair requests/inquiries to the OMEGA Customer Service Department. BEFORE RETURNING ANY PRODUCT(S) TO OMEGA, PURCHASER MUST OBTAIN AN AUTHORIZED RETURN (AR) NUMBER FROM OMEGA'S CUSTOMER SERVICE DEPARTMENT (IN ORDER TO AVOID PROCESSING DELAYS). The assigned AR number should then be marked on the outside of the return package and on any correspondence.

The purchaser is responsible for shipping charges, freight, insurance and proper packaging to prevent breakage in transit.

FOR **WARRANTY** RETURNS, please have the following information available BEFORE contacting OMEGA:

1. Purchase Order number under which the product was PURCHASED,
2. Model and serial number of the product under warranty, and
3. Repair instructions and/or specific problems relative to the product.

FOR **NON-WARRANTY** REPAIRS, consult OMEGA for current repair charges. Have the following information available BEFORE contacting OMEGA:

1. Purchase Order number to cover the COST of the repair,
2. Model and serial number of the product, and
3. Repair instructions and/or specific problems relative to the product.

OMEGA's policy is to make running changes, not model changes, whenever an improvement is possible. This affords our customers the latest in technology and engineering.

Where Do I Find Everything I Need for Process Measurement and Control? OMEGA...Of Course!

Shop online at omega.com℠

TEMPERATURE

- Thermocouple, RTD & Thermistor Probes, Connectors, Panels & Assemblies
- Wire: Thermocouple, RTD & Thermistor
- Calibrators & Ice Point References
- Recorders, Controllers & Process Monitors
- Infrared Pyrometers

PRESSURE, STRAIN AND FORCE

- Transducers & Strain Gages
- Load Cells & Pressure Gages
- Displacement Transducers
- Instrumentation & Accessories

FLOW/LEVEL

- Rotameters, Gas Mass Flowmeters & Flow Computers
- Air Velocity Indicators
- Turbine/Paddlewheel Systems
- Totalizers & Batch Controllers

pH/CONDUCTIVITY

- pH Electrodes, Testers & Accessories
- Benchtop/Laboratory Meters
- Controllers, Calibrators, Simulators & Pumps
- Industrial pH & Conductivity Equipment

DATA ACQUISITION

- Communications-Based Acquisition Systems
- Data Logging Systems
- Wireless Sensors, Transmitters, & Receivers
- Signal Conditioners
- Data Acquisition Software

HEATERS

- Heating Cable
- Cartridge & Strip Heaters
- Immersion & Band Heaters
- Flexible Heaters
- Laboratory Heaters

ENVIRONMENTAL MONITORING AND CONTROL

- Metering & Control Instrumentation
- Refractometers
- Pumps & Tubing
- Air, Soil & Water Monitors
- Industrial Water & Wastewater Treatment
- pH, Conductivity & Dissolved Oxygen Instruments

M3815/0916