1 YEAR WARRANTY

OMEGA®

User's Guide

Shop online at omega.com®

e-mail: info@omega.com
For latest product manuals: omegamanual.info

ISO 9001 CERTIFIED CORPORATE QUALITY — STAMFORD, CT
ISO 9001 CERTIFIED CORPORATE QUALITY — MANCHESTER, UK

MADE IN UNITED KINGDOM

FFB-8
Fluidized Bath

OMEGAnet® Online Service omega.com	Internet e-mail info@omega.com

Servicing North America:

U.S.A.:
ISO 9001 Certified

Omega Engineering, Inc., One Omega Drive, P.O. Box 4047
Stamford, CT 06907-0047 USA
Toll Free: 1-800-826-6342 TEL: (203) 359-1660
FAX: (203) 359-7700 e-mail: info@omega.com

Canada:

976 Bergar
Laval (Quebec), H7L 5A1 Canada
Toll-Free: 1-800-826-6342 TEL: (514) 856-6928
FAX: (514) 856-6886 e-mail: info@omega.ca

For immediate technical or application assistance:

U.S.A. and Canada: Sales Service: 1-800-826-6342/1-800-TC-OMEGA®
Customer Service: 1-800-622-2378/1-800-622-BEST®
Engineering Service: 1-800-872-9436/1-800-USA-WHEN®

Mexico/ Latin America

En Español: 001 (203) 359-7803 FAX: 001 (203) 359-7807
info@omega.com.mx e-mail: espanol@omega.com

Servicing Europe:

Benelux:

Managed by the United Kingdom Office
Toll-Free: 0800 099 3344 TEL: +31 20 347 21 21
FAX: +31 20 643 46 43 e-mail: sales@omegaeng.nl

Czech Republic:

Frystatska 184
733 01 Karviná, Czech Republic
Toll-Free: 0800-1-66342 TEL: +420-59-6311899
FAX: +420-59-6311114 e-mail: info@omegashop.cz

France:

Managed by the United Kingdom Office
Toll-Free: 0800 466 342 TEL: +33 (0) 161 37 29 00
FAX: +33 (0) 130 57 54 27 e-mail: sales@omega.fr

Germany/Austria:

Daimlerstrasse 26
D-75392 Deckenpfronn, Germany
Toll-Free: 0800 6397678 TEL: +49 (0) 7056 9398-0
FAX: +49 (0) 7056 9398-29 e-mail: info@omega.de

United Kingdom:
ISO 9001 Certified

OMEGA Engineering Ltd.
One Omega Drive, River Bend Technology Centre, Northbank
Irlam, Manchester M44 5BD United Kingdom
Toll-Free: 0800-488-488 TEL: +44 (0) 161 777-6611
FAX: +44 (0) 161 777-6622 e-mail: sales@omega.co.uk

It is the policy of OMEGA Engineering, Inc. to comply with all worldwide safety and EMC/EMI regulations that apply. OMEGA is constantly pursuing certification of its products to the European New Approach Directives. OMEGA will add the CE mark to every appropriate device upon certification.

The information contained in this document is believed to be correct, but OMEGA accepts no liability for any errors it contains, and reserves the right to alter specifications without notice.

WARNING: These products are not designed for use in, and should not be used for, human applications.

CONTENTS

FFB-8 Operator's Manual

SAFETY AND INSTALLATION		*page*
	English	4
	Français	5
	Deutsch	6
	Español	7
INTRODUCTION		
	Introduction	8
	Application	8
	Operator Safety	9
	Contact information	9
	Guarantee	9
	Specification	10
INSTALLATION		11
	Controls	12
OPERATION		14
	Start Up	14
	Calibration	15
	Dead Bed Calibration	15
	Close Down	16
SERVICING		17
	Daily Maintenance	17
	Periodic Maintenance	17
	Fault finding	18
	Component Access	20
	Spares List	24
	Accessories	24
	Diagrams	25
	FAQ'S	31

NOTES

Introduction

Please read all the information in this booklet before using the unit.

Warning

HIGH TEMPERATURES ARE DANGEROUS: they can cause serious burns to operators and ignite combustible material.

Techne have taken great care in the design of these units to protect operators from hazards, but users should pay attention to the following points:

- USE CARE AND WEAR PROTECTIVE GLOVES TO PROTECT HANDS;
- DO NOT put hot objects on or near combustible objects;
- DO NOT operate the unit close to inflammable liquids or gases;
- DO NOT place any liquid directly in your unit;
- At all times USE COMMON SENSE.

Operator Safety

All users of Omega equipment must have available the relevant literature needed to ensure their safety.

It is important that only suitably trained personnel operate this equipment, in accordance with the instructions contained in this manual and with general safety standards and procedures. If the equipment is used in a manner not specified by Techne the protection provided by the equipment to the user may be impaired.

All Omega units have been designed to conform to international safety requirements and are fitted with an overtemperature cutout. On some models, the cutout is adjustable and should be set to suit the application. On all other models the cutout is preset to protect the unit.

If a safety problem should be encountered, switch off at the mains socket and remove the plug from the supply.

Installation

1. All Omega units are supplied with a power cable. This may be integral or plug-in.
2. Before connecting the mains supply, check the voltage against the rating plate. Connect the mains cable to a suitable plug according to the table below. **Note that the unit must be earthed to ensure proper electrical safety.**

Connections	*220/240V*	*110/120V*
Live	Brown	Black
Neutral	Blue	White
Earth	Green/yellow	Green

   The fused plug supplied with the mains lead for use in the UK is fitted with the following value fuse to protect the cable: 230V UK 13 AMP

   The fuse in the unit protects the unit and the operator.

   Note that units marked 230V on the rating plate work at 220V; units marked 120V work at 110V. In both cases, however, the heating rate will degrade by approximately 8%. The rating plate is on the rear of the unit.
3. Plug the mains cable into the socket on the rear of the unit.
4. Place the unit on a suitable bench or flat workspace, or in a fume cupboard if required, ensuring that the air inlet vents on the underside are free from obstruction.
5. Note that the following symbol next to the indicator lamp on the front panel of the units and has the following meanings:

   ~ : the power indicator

6. Symbols on or near the power switch of the unit have the following meanings:

   I : mains switch On

   O : mains switch Off

After use

When you have finished heating samples, remember that parts of the unit – the tubes, blocks and associated accessories – may be very hot. Take the precautions listed earlier.

Guarantee

The unit is guaranteed against any defect in material or workmanship for the period specified on the enclosed guarantee card. This period is from the date of purchase, and within this period all defective parts will be replaced free of charge provided that the defect is not the result of misuse, accident or negligence. Servicing under this guarantee should be obtained from the supplier.

Notwithstanding the description and specification(s) of the units contained in the User's Manual, Omega hereby reserves the right to make such changes as it sees fit to the units or to any component of the units.

This Manual has been prepared solely for the convenience of Techne customers and nothing in this Instruction Book shall be taken as a warranty, condition or representation concerning the description, merchantability, fitness for purpose or otherwise of the units or components.

User maintenance

NOTE THAT THIS EQUIPMENT SHOULD ONLY BE DISMANTLED BY PROPERLY TRAINED PERSONNEL.

REMOVING THE SIDE, FRONT OR REAR PANELS EXPOSES POTENTIALLY LETHAL MAINS VOLTAGES.

THERE ARE NO USER MAINTAINABLE PARTS WITHIN THE EQUIPMENT.

In the unlikely event that you experience any problems with your unit which cannot easily be remedied, you should contact your supplier and return the unit if necessary. Please include any details of the fault observed and remember to return the unit in its original packing. Techne accept no responsibility for damage to units which are not properly packed for shipping: if in doubt, contact your supplier. See the Decontamination Certificate supplied with your unit.

1. Cleaning

Before cleaning your unit ALWAYS disconnect from the power supply and allow to cool below 50° C.

Your unit can be cleaned by wiping with a damp soapy cloth. Care should be exercised to prevent water from running inside the unit. Do not use abrasive cleaners.

2. Fuses

Your unit is protected by one or two fuses. These should only be changed by suitably qualified personnel.

If the fuses blow persistently, a serious fault is indicated and you may need to return the unit to your supplier for repair.

Contact Information

For technical, sales or servicing information, contact our Customer Service Department at 1-800-622-2378 or 203-359-1660.

We can also be reached on the Internet at omega.com

e-mail: cservice@omega.com

Introduction

Veuillez lire attentivement toutes les instructions de ce document avant d'utiliser l'appareil.

Avertissement

DANGER DE TEMPERATURES ELEVEES : les opérateurs peuvent subir de graves brûlures et les matériaux combustibles risquent de prendre feu.

Omega a apporté un soin tout particulier à la conception de ces appareils de façon à assurer une protection maximale des opérateurs, mais il est recommandé aux utilisateurs de porter une attention spéciale aux points suivants :

- PROCEDER AVEC SOIN ET PORTER DES GANTS POUR SE PROTEGER LES MAINS.
- NE PAS poser d'objets chauds sur ou près de matériaux combustibles.
- NE PAS utiliser l'appareil à proximité de liquides ou de gaz inflammables.
- NE PAS verser de liquide directement dans l'appareil.
- FAIRE TOUJOURS PREUVE DE BON SENS.

Sécurité de l'opérateur

Tous les utilisateurs de produits Omega doivent avoir pris connaissance des manuels et instructions nécessaires à la garantie de leur sécurité.

Important : cet appareil doit impérativement être manipulé par un personnel qualifié et utilisé selon les instructions données dans ce document, en accord avec les normes et procédures de sécurité générales. Dans le cas où cet appareil ne serait pas utilisé selon les consignes précisées par Omega, la protection pour l'utilisateur ne serait alors plus garantie.

Tous les appareils Omega sont conçus pour répondre aux normes de sécurité internationales et sont dotés d'un coupe-circuit en cas d'excès de température. Sur certains modèles, ce coupe-circuit est réglable pour s'adapter à l'application désirée. Sur d'autres modèles, il est pré-réglée en usine pour assurer la protection de l'appareil.

Dans le cas d'un problème de sécurité, coupez l'alimentation électrique au niveau de la prise murale et enlevez la prise connectée à l'appareil.

Installation

1. Tous les appareils Omega sont livrés avec un câble d'alimentation qui peut être intégré à l'appareil ou à raccorder.
2. Avant de brancher l'appareil, vérifiez la tension requise indiquée sur la plaque d'identification. Raccordez le câble électrique à la prise appropriée en vous reportant au tableau ci-dessous. **Il est important que l'appareil soit relié à la terre pour assurer la protection électrique requise.**

Connexions	220/240 V	110/120 V
Phase	Marron	Noir
Neutre	Blue	Blanc
Terre	Vert/juane	Vert

   Le fusible à l'intérieur de l'appareil est destiné à assurer la protection de l'appareil et de l'opérateur.

   Remarque : les appareils dont la plaque indique 230 V peuvent fonctionner sur 220 V, et ceux dont la plaque indique 120 V peuvent fonctionner sur 110 V. Dans les deux cas cependant, le capacité de chauffage diminuera d'environ 8 %. La plaque d'identification se trouve à l'arrière de l'appareil.
3. Raccordez le câble d'alimentation à la prise située à l'arrière de l'appareil.
4. Placez l'appareil sur un plan de travail ou surface plane, ou le cas échéant, dans une hotte d'aspiration, en s'assurant que les trous d'aération situés sous l'appareil ne sont pas obstrués.
5. Les symboles ci-dessous situés à côté des témoins lumineux sur la face avant de l'appareil ont la signification suivante:

   ~ : témoin d'alimentation
6. Les symboles situés sur ou à côté de l'interrupteur de l'appareil ont la signification suivante :

   I : arrêt

   O : marche

Après utilisation

Lorsque vous avez fini de chauffer les échantillons, n'oubliez pas que certaines parties de l'appareil - les éprouvettes, leurs supports et autres accessoires - risquent d'être très chaudes. Il est donc recommandé de toujours prendre les précautions citées plus haut.

Garantie

L'appareil est garanti contre tout défaut ou vice de fabrication pour la durée figurant sur la carte de garantie, à compter de la date d'achat de l'appareil. Au cours de cette période, toutes les pièces défectueuses seront remplacées gratuitement, dans la mesure où la défaillance n'est pas due à une mauvaise utilisation, un accident ou une négligence. Toute réparation sous garantie sera effectuée par le fournisseur.

Malgré la description et les spécifications de l'appareil données dans le manuel de l'utilisateur, Omega se réserve le droit d'effectuer les changements nécessaires à l'appareil ou à tout élément qui entre dans sa composition.

Ce manuel a été exclusivement rédigé à l'attention des clients de Omega, et aucun élément de ce guide d'instructions ne peut être utilisé comme garantie, condition ou représentation concernant la description, commercialisation, adaptation aux conditions d'utilisation ou autre des appareils ou de leurs composants.

Entretien utilisateur

IMPORTANT : CET APPAREIL NE PEUT ETRE DEMONTE QUE PAR DU PERSONNEL QUALIFIE.

LORSQUE LES PANNEAUX AVANT, ARRIERE ET LATERAUX SONT DEMONTES, L'OPERATEUR EST EXPOSE A DES TENSIONS QUI PEUVENT ETRE MORTELLES.

CET APPAREIL NE CONTIENT AUCUN ELEMENT QUI DEMANDE UN ENTRETIEN DE LA PART DE L'UTILISATEUR.

Dans le cas peu probable où votre appareil présente un défaut de fonctionnement auquel il est difficile de remédier, il est alors préférable de contacter votre fournisseur et, le cas échéant, de renvoyer le matériel. Veuillez inclure une description détaillée du problème constaté et retourner l'appareil dans son emballage d'origine. Omega ne sera pas tenu responsable des dommages subis par tout appareil dont l'emballage est inadéquat pour le transport. Pour plus de sûreté, contactez votre fournisseur. Voir le certificat de décontamination livré avec le produit.

1. Nettoyage

Avant de nettoyer l'appareil, assurez-vous TOUJOURS que le câble d'alimentation est déconnecté et laissez la température redescendre en dessous de 50 °C.

Utilisez un chiffon imprégné d'eau savonneuse pour nettoyer l'appareil. Veillez à ne pas introduire d'eau dans l'appareil. N'utilisez pas de produits abrasifs.

2. Fusibles

La protection de l'appareil est assurée par un ou deux fusibles dont le remplacement ne peut être effectué que par un personnel qualifié.

Si les fusibles sautent sans arrêt, il s'agit d'un problème sérieux. Nous vous conseillons dans ce cas de prendre contact avec votre fournisseur pour réparation.

Einleitung

Bitte lesen Sie diese Bedienungsanleitung komplett bevor Sie dieses Gerät benutzen.

Warnung

HOHE TEMPERATUREN SIND GEFÄHRLICH: sie können dem Bediener ernsthafte Verletzungen zufügen und brennbare Materialien können sich leicht entzünden.

Omega hat bei der Konstruktion dieses Gerätes sehr darauf geachtet, daß der Bediener vor Gefahren geschützt ist. Dennoch sollten Sie auf die folgenden Punkte achten:

- SEIEN SIE VORSICHTIG UND TRAGEN SIE SCHUTZHANDSCHUHE
- Legen Sie heiße Gegenstände NICHT auf oder in die Nähe von leicht brennbaren Materialien; vermeiden Sie Arbeiten in der Nähe von leicht entzündbaren Flüssigkeiten oder Gasen.
- Bringen sie KEINE Flüssigkeiten direkt in Ihr Gerät.
- Benutzen Sie immer den normalen Menschenverstand

Sicherheit des Anwenders

Alle Benutzer von Omega Geräten müssen Zugang zu der entsprechenden Literatur haben, um ihre Sicherheit zu gewähren.

Es ist wichtig, daß diese Geräte nur von entsprechend geschultem Personal betrieben werden, das die in dieser Gebrauchsanweisung enthaltenen Maßnahmen und allgemeine Sicherheitsbestimmungen und -vorkehrungen beachtet. Wenn das Gerät anders eingesetzt wird als vom Hersteller empfohlen, kann dies die persönliche Sicherheit des Anwenders beeinträchtigen. Die Geräte von entsprechen den internationalen Sicherheitsbestimmungen und sind mit einem automatischen Übertemperaturabschalter ausgestattet. Bei einigen Modellen ist der Übertemperaturabschalter verstellbar und sollte je nach Anwendung entsprechend eingestellt werden. Bei allen anderen Modellen ist der Temperaturschutz voreingestellt um Schäden am Gerät zu vermeiden. Wenn ein Sicherheitsproblem auftreten sollte, muß das Gerät ausgeschaltet und vom Stromnetz getrennt werden.

Installation

1. Alle Omega Geräte werden mit einem Stromanschlußkabel geliefert. Dieses ist entweder fest mit dem Gerät verbunden oder zum Einstecken.
2. Vergleichen Sie, ob die Spannung Ihrer Stromversorgung mit den Angaben auf dem Typenschild des Geräte übereinstimmen. Verbinden Sie das Stromanschlußkabel mit einer geeigneten Stromversorgung gemäß der nächstehenden Tabelle. Achtung: Das Gerät muß geerdet sein, um die elektrische Sicherheit zu gewährleisten!

Verbindungen	*220/240V*	*110/120V*
Stromführend	Braun	Schwarz
Neutral	Blau	Weiß
Erde	Grün/Gelb	Grün

   Geräte, die für 230 Volt ausgelegt sind, können auch bei 220 Volt arbeiten, Geräte für 120 Volt auch bei 110 Volt. In beiden Fällen verringert sich die Aufheizrate um ca. 8%. Das Typenschild befindet sich hinten am Gerät.
3. Stecken Sie das Stromkabel in die vorgesehene Buchse hinten am Gerät.
4. Stellen Sie das Gerät auf eine ebene Arbeitsfläche bzw. (falls erforderlich) unter einen Laborabzug. Beachten Sie, daß die Entlüftungsrippen an der Geräteunterseite immer frei zugänglich sind.
5. Wenn die Anzeigenlämpchen an der Vorderseite leuchten, hat dies folgende Bedeutung:

   ~ : Gerät ist eingeschaltet
6. Die Symbole auf oder neben dem EIN/AUS-Schalter an der Geräterückseite bedeuten:

   I : An

   O : Aus

Nach dem Gebrauch

Vergessen Sie nicht, daß Teile des Gerätes (die Gefäße, die Blöcke und andere Zubehörteile) nach dem Erhitzen von Proben noch sehr heiß sein können. Bitte beachten Sie die oben genannten Vorsichtsmaßnahmen.

Garantie

Die Garantiedauer des Gerätes ist auf der beiliegenden Garantiekarte angegeben und schließt Fehler im Material oder der Verarbeitung ein. Die Garantiedauer beginnt am Tag des Einkaufs. Sämtliche defekte Teile werden innerhalb dieses Zeitraumes kostenlos ersetzt unter der Voraussetzung, daß dem Defekt keine unsachgemäße Handhabung, Fahrlässigkeit oder ein Unfall zugrundeliegt. Der unter diese Garantie fallende Service wird vom Lieferanten geleistet.

Ungeachtet der in dieser Gebrauchsanweisung enthaltenen Beschreibungen und Spezifikationen, behält sich Omega hiermit das Recht vor, Änderungen an den Geräten bzw. an einzelnen Geräteteilen durchzuführen.

Diese Gebrauchsanleitung wurde ausschließlich dazu erstellt, um Kunden die Handhabung der Omega-Geräte zu erleichtern. Nichts in dieser Gebrauchsanleitung darf als Garantie, Bedingung oder Voraussetzung verstanden werden, sei es die Beschreibung, Marktgängigkeit, Zweckdienlichkeit oder sonstiges bezüglich der Geräte oder deren Bestandteile.

Wartung durch den Bediener

BEACHTEN SIE, DASS DIESES GERÄT NUR VON TECHNISCHEN FACHKRÄFTEN GEÖFFNET UND DEMONTIERT WERDEN DARF.

DURCH ENTFERNEN DES GEHÄUSES ODER GEHÄUSETEILEN SIND BAUTEILE MIT LEBENGEFÄHRLICHEN SPANNUNGEN FREI ZUGÄNGLICH.

IM INNERN DES GERÄTES BEFINDEN SICH KEINE TEILE, DIE VOM ANWENDER GEWARTET WERDEN MÜSSEN.

Falls Ihr Gerät nicht ordnungsgemäß arbeitet, wenden Sie sich an Ihren Lieferanten oder senden Sie das Gerät wenn nötig zurück. Fügen Sie eine genaue Beschreibung des Defektes bei. Verpacken Sie das Gerät möglichst im Originalkarton. Bitte beachten Sie, daß Omega keine Haftung bei Transportschäden aufgrund unzureichender Verpackung übernehmen. Setzen Sie sich im Zweifelsfall mit Ihrem Lieferanten in Verbindung. Bitte beachten Sie die Entgiftungsbescheinigung, die Sie mit dem Gerät erhalten haben.

1. Reinigen

Bevor Sie Ihr Gerät reinigen, sollten Sie

- zuerst den Netzstecker ziehen
- das Gerät unter 50°C abkühlen lassen.

Ein feuchtes Tuch mit Seifenlösung reinigt Ihr Gerät am besten. Achten Sie darauf, daß kein Wasser in das Gerät gelangt. Verwenden Sie keine Scheuermittel.

2. Sicherungen

Die Stromzuleitung ist durch ein oder zwei Sicherungen geschützt. Diese sollten nur durch qualifiziertes Fachpersonal ausgetauscht werden. Wenn die Sicherung wiederholt durchbrennt, liegt ein größerer Defekt vor. Das Gerät muß zur Reparatur an Ihren Lieferanten eingesandt werden.

Introducción

Le rogamos lea cuidadosamente la información contenida en este folleto antes de manipular el aparato.

Aviso

LAS TEMPERATURAS ELEVADAS SON PELIGROSAS: pueden causarle graves quemaduras y provocar fuego en materiales combustibles.

Omega ha puesto gran cuidado en el diseño de estos aparatos para proteger al usuario de cualquier peligro; aún así se deberá prestar atención a los siguientes puntos:

- EXTREME LAS PRECAUCIONES Y UTILICE GUANTES PARA PROTEGERSE LAS MANOS;
- NO coloque objetos calientes encima o cerca de objetos combustibles;
- NO maneje el aparato cerca de líquidos inflamables o gases;
- NO introduzca ningún líquido directamente en el aparato;
- UTILICE EL SENTIDO COMUN en todo momento.

Seguridad del usuario

Todos los usuarios de equipos Omega deben disponer de la información necesaria para asegurar su seguridad.

De acuerdo con las instrucciones contenidas en este manual y con las normas y procedimientos generales de seguridad, es muy importante que sólo personal debidamente capacitado opere estos aparatos. De no ser así, la protección que el equipo le proporciona al usuario puede verse reducida.

Todos los equipos Omega han sido diseñados para cumplir con los requisitos internacionales de seguridad y traen incorporados un sistema de desconexión en caso de sobretemperatura. En algunos modelos el sistema de desconexión es variable, lo que le permite elegir la temperatura según sus necesidades. En otros, el sistema de desconexión viene ya ajustado para evitar daños en el equipo.

En caso de que surgiera un problema de seguridad, desconecte el equipo de la red.

Instalación

1. Todos los aparatos Omega se suministran con un cable de alimentación. Puede ser fijo o independiente del aparato.
2. Antes de conectarlo, compruebe que el voltaje corresponde al de la placa indicadora. Conecte el cable de alimentación a un enchufe adecuado según la tabla expuesta a continuación. El equipo debe estar conectado a tierra para garantizar la seguridad eléctrica.

Conexiones	220/240V	110/120V
Linea	Marrón	Negro
Neutro	Azul	Blanco
Tierra	Verde/amarillo	Verde

   El enchufe suministrado con el cable de alimentación viene equipado con un fusible del siguiente valor para proteger el cable:

   230V Reino Unido 5AMP

   El fusible una vez instalado protege tanto al equipo como al usuario.

   Asegúrese de que los equipos marcados 230V en la placa indicadora funcionan a 220V y de que los equipos marcados 120V funcionan a 110V. No obstante, en ambos casos la velocidad de calentamiento se verá reducida en un 8% aproximadamente. La placa indicadora está situada en la parte posterior del equipo.
3. Conecte el cable a la toma de tensión en la parte posterior del equipo.
4. Sitúe el aparato en un lugar apropiado tal como una superficie de trabajo plana, o si fuera necesario incluso en una campana con extractor de humos, asegurándose de que las entradas de aire en la parte inferior no queden obstruidas.
5. Los símbolos, que pueden aparecer junto a las luces indicadoras en el panel frontal del equipo, tienen los siguientes significados:

   ~ : Indicador de potencia
6. Los símbolos que se encuentran en o cerca del interruptor de alimentación tienen los siguientes significados:

   I : Interruptor principal encendido

   O : Interruptor principal apagado

Después de su uso

Cuando haya finalizado el calentamiento de muestras, recuerde que las piezas del equipo, tales como tubos, bloques y demás accesorios, pueden estar muy calientes. Tome las precauciones mencionadas anteriormente.

Garantía

Este aparato está garantizado contra cualquier defecto material o de fabricación durante el periodo especificado en la tarjeta de garantía adjunta. Este plazo inicia a partir de la fecha de compra, y dentro de este periodo todas las piezas defectuosas serán reemplazadas gratuitamente siempre que el defecto no sea resultado de un uso incorrecto, accidente o negligencia. Mientras se encuentre bajo garantía las revisiones las debe llevar a cabo el proveedor.

A pesar de la descripción y las especificaciones de los aparatos contenidas en el Manual del Usuario, Omega se reserva por medio de este documento el derecho a efectuar los cambios que estime oportunos tanto en los aparatos como en cualquier componente de los mismos.

Este manual ha sido preparado exclusivamente para los clientes de Omega y nada de lo especificado en este folleto de instrucciones se tomará como una garantía, condición o aseveración de la descripción, comerciabilidad o adecuación para cualquier fin específico de los aparatos o sus componentes.

Mantenimiento

ESTE APARATO DEBE SER DESMONTADO SOLO Y EXCLUSIVAMENTE POR PERSONAL DEBIDAMENTE CAPACITADO.

EL RETIRAR LOS PANELES LATERALES, FRONTALES O TRASEROS SUPONE DEJAR AL DESCUBIERTO TENSION DE LA RED PELIGROSA.

EL EQUIPO NO CONSTA DE NINGUNA PIEZA DE CUYO MANTENIMIENTO SE PUEDA ENCARGAR EL USUARIO.

En el caso improbable de que experimentara algún problema con su aparato que no pudiera resolver con facilidad, debería ponerse en contacto con su proveedor y devolverlo si fuera necesario. Indique de forma detallada todos los defectos que haya notado y devuelva el equipo en su embalaje original. Omega no aceptará responsabilidad alguna por daños causados en equipos que no estuvieran debidamente embalados para su envío; si tuviera alguna duda, póngase en contacto con su proveedor. Sírvase consultar el Certificado de Descontaminación suministrado con su aparato.

1. Limpieza

Antes de limpiar su aparato, desconéctelo SIEMPRE de la fuente de alimentación y permita que se enfríe por debajo de los 50°C.

Este aparato se puede limpiar pasándole un paño húmedo enjabonado. Hágalo con cuidado parae evitar que caiga agua dentro del mismo. No utilice limpiadores abrasivos.

2. Fusibles

Su aparato está protegido por uno o dos fusibles. Sólo deben cambiarlos personal debidamente capacitado.

Si los fusibles se fundieran repetidamente, esto indicaría una avería grave y puede que tuviera que devolverle el aparato a su proveedor para su reparación.

INTRODUCTION

Read the whole of this book before commencing work with the unit.

The Techne FFB-8 employs the principle of fluidisation of a mass of finely divided particles to provide a safe, essentially isothermal environment with a high rate of heat transfer.

To achieve a state of fluidisation, a gas stream is forced to pass vertically through the bed of fine powder; chromatographic alumina (a specially refined grade of aluminium oxide) is the fluidising medium used in the FFB-8. At, and above, a certain critical value of flow rate the particles become separated from each other and the whole mass behaves like a liquid. In this state the powder will flow and move as though it were a liquid; low density objects will float on it, while more dense ones will sink; more importantly, though, the individual alumina particles will circulate within the bath giving an essentially uniform temperature distribution throughout the working volume of the bath, and a high degree of thermal coupling between the heat source and load.

In addition, the mass of fluidised powder changes its basic characteristics very little over a wide temperature range, has no freezing point and no practical boiling point and therefore by suitable choice of fluidising media, the principle of fluidisation can be used to temperatures over 1700°C and below -120°C.

The most commonly used fluidising gas is compressed air, it is important that it should be clean, dry, free from oil and at a constant pressure. Techne can supply an additional filter/regulator assembly for compressed air which does not comply with the above requirement. Techne are alternatively able to offer a suitable free standing air compressor complete with the necessary filtration system for installations where a compressed air supply is not available. Any other gas could be used for special applications provided appropriate precautions are taken. The FFB-8 specification applies only when compressed air is used.

Application

The characteristics of the FFB-8 in terms of thermal uniformity and heat transfer make it a useful tool in the calibration and testing of a very wide range of temperature sensors; however, the unit is applicable to many other processes, such as thermal testing of sensitive components eg semiconductor devices, wire products, delicate transducers - and can be used as a constant temperature environment for chemical reactions.

Because the fluidised bed is composed of a fine dry powder, it does not display the surface tension effects of liquid baths, and does not wet any objects immersed in it; the basic electrical insulating property of the alumina used in the FFB-8 is not affected by fluidisation, making it possible to conduct electrical measurements on immersed objects such as assembled printed circuit boards. If the FFB-8 is to be used below ambient see Page 9.

Avoid siting the FFB-8 in a laboratory environment which contains instruments that are sensitive to dust. Although the fluidised bath has its own dust extraction system, a small amount of fine dust may still be emitted during operation.

Operator Safety

It is important that only suitably trained personnel operate this equipment. It must also be used in accordance with the instructions contained in this manual and with proper safety standards and procedures.

It is imperative that all personnel who may come into contact with our equipment have available such of our literature as they require to ensure their safety.

If there is any doubt whatsoever relating to the proper use of this equipment we will be pleased to assist you.

Contact Information

For technical sales or service information, contact
our Customer Service Department at
1-800-622-2378 or 203-359-1660.
We can also be reached on the Internet at omega.com
e-mail: cservice@omega.com

Guarantee

This instrument is guaranteed against any defect in material or workmanship for a period as specified on the enclosed guarantee card. This period is from the date of purchase, and within this period all defective parts will be replaced free of charge provided that the defect is not the result of misuse, accident or negligence. Servicing under this guarantee should be obtained from the supplier.

Notwithstanding the description and specification(s) of the units contained in the Instruction Book, Techne hereby reserves the right to make such changes as it shall see fit to the units or to any component of the units. This Instruction Book has been prepared solely for the convenience of Techne customers and nothing in this Instruction Book shall be taken as a warranty, condition or representation concerning the description, merchantability, fitness for purpose or otherwise of the units or the components.

SPECIFICATION

General characteristics

Temperature range		50°C to 700°C
Temperature stability		
dead bed stability (for 8 minutes)		±0.01°C
at 50°C:	short term	±0.2°C
	long term	±0.5°C
at 600°C:	short term	±0.3°C
	long term	±0.5°C
Nominal heater power		4 x 750W
Heat up time from 20°C to maximum		1hr 45mins
Cool down time from maximum to 200°C		2hrs 45mins
Electrical supply		240V 50/60Hz

Air supply

pressure		4.14 bar (60 psi)
maximum flow		127 l/min

Nominal dimensions and weights

Overall	width	770mm
	depth	515mm
	height	600mm
Internal dimensions		
diameter		165mm
depth		493mm
usable depth below surface of fluidised medium		385mm
Weights		
Unit (including fluidising medium) net		64Kg
Chromatographic alumina		16Kg
Basket		
net		1Kg

INSTALLATION

Avoid siting the FFB-8 in a laboratory environment which contains instruments that are sensitive to dust. Although the fluidised bath has its own dust extraction system, a small amount of fine dust may still be emitted during operation.

Power

The FFB-8 requires a power supply of 240V 50/60Hz at 3KW; thus it can be run from a standard 13A socket.

Before connecting to the main supply check the voltage with that marked on the rating plate. Connect the mains cable to a suitable supply as follows:

Connection	240 V
Live	Brown
Neutral	Blue
Earth	Green/Yellow

Air

The FFB-8 is supplied with integral filters and regulators suitable for normal clean dry air line supply between 60 and 125 lb/in^2. If the air supply is excessively dirty Techne can supply an additional external filter/regulator assembly which, if used, must be adjusted to its maximum setting of 60 lb/in^2. The air supply should be connected via suitable flexible hose to the hose tail at the rear of the left hand end of the bath.

Mechanical

The unit should be mounted on a firm level surface. Normal operation only requires access to the front of the units but periodic maintenance and servicing requires access to the left hand side also; this should be borne in mind when positioning the unit initially.

A bubble level (25) is built into the frame at the base of the front panel; this should be accurately levelled by adjusting the four corner feet (10). After final adjustment, all four feet should be firmly grounded and the unit should be level. Failure to do this can impair the operation of the unit. The surface should also be heat resistant.

Alumina

Fill the bath with sufficient of the alumina supplied so that it is 150mm (6") below the top surface of the unit before it is fluidized. The dust extraction system should be turned on during filling in order to minimise the amount of dust given off.

Should the fluidised bath be stored for long periods of time under damp or humid conditions, moisture may be absorbed by the alumina which is hydroscopic. To avoid violent fluidisation which occurs when damp alumina is heated above 100°C, operate the bath for a period of approximately 8 hours at 90°C prior to operation at elevated temperatures.

NEVER ADD COLD OR DAMP ALUMINA TO A HOT BATH AS THIS WILL ALSO CAUSE VIOLENT FLUIDISATION WHICH CAN BE DANGEROUS. Allow the bath to cool then add the fresh alumina. If this fresh alumina is a large proportion of the charge then dry the whole charge as above.

Note

To prevent damage during transit the float may have been removed from the flowmeter on the front panel. If so the following steps should be taken when installing the unit.

1. Remove the protective cover.
2. Remove the flow tube by first removing the plastic clip at the top of the flow tube, lift the flow tube up and remove the bottom of the tube clear of the flowmeter assembly. Pull the tube downwards from the top insert.
3. Fit the float with the pointed end down, into the tube.
4. Push the tube onto the top insert, line the tube up with the bottom insert, pull the flow tube and the top insert down until the flow tube is fully engaged on the bottom insert, refit the plastic clip.
5. Refit the protective cover.

CONTROLS

Mains on/off Switch (19)

Controls the mains input to the unit. This should be used in preference to the interlocks (see "heater indicator") when switching the unit off.

Mains Fuse (18)

Main fuse for the unit, rating 15A @ 240V AC.

Temperature Controller (16)

Units prior to Serial Number/5

When the mains switch (19) is set to the ON position the fluorescent indicator panel will display the measured value of temperature in digital form. Depress and release either the UP or DOWN button and the display will indicate the set point value for two seconds, and then revert to the measured value.

To alter the set point depress the respective UP/DOWN button and after a delay of two seconds the set point will change in the required direction. The nine segment bars situated to the left of the digital readout provide error percentages of measured values of temperature with respect to the set temperature. Illumination of the centre bar indicates within 1% of set point. The bars above and below the centre bar indicate, when illuminated, the upscale or downscale errors in increasing magnitude.

Temperature controller (16)

Units with Serial Number/5 to /8

When the mains switch (19) is set to the ON position the fluorescent indicator panel will display the measured and set temperature in digital form. To alter the set point depress the respective UP/DOWN button and after a delay of two seconds the set point will change in the required direction.

The following control parameters have been factory pre-set:

	810	808
Proportional Band	2%	7%
Integral	300sec	110sec
Derivative	40sec	3sec
Approach	3	-
Cycle Time	0.3secs	-
Maximum Power	100%	-

Temperature controller (16)

Units with Serial Number/9 onwards

When the mains switch (19) is set to the ON position the fluorescent indicator panel will display the measured and set temperature in digital form. To alter the set point depress the respective UP/DOWN button and after a delay of two seconds the set point will change in the required direction.

The control parameters have been factory pre-set if you need to know the latest values contact the Service Department at Techne.

Fluidisation Air Control (21)

The valve at the bottom of the flowmeter controls the amount of air for fluidising the bed, the amount of flow being indicated by the float in the tube on a 2-25 scale.

Extraction Air Switch (22)

Turns the dust extraction system on and off. Without dust extraction fine dust from the bath could escape into the workroom atmosphere and although harmless, it has a nuisance value. The extraction system should, therefore, be used whenever the bath is running.

Dust Extraction Indicator (20)

Lights green when the dust extraction system is working.

Heater indicator (20)

Lights orange when the heaters are on. Heaters are interlocked so that they will only turn on when fluidising air is also on and exceeds a factory preset value.

OPERATION

The FFB-8 calibration Fluidised Bath is capable of precise performance, but for reliable and consistent results it must be used by personnel conversant with its operation.

For temperature stability the heat input to the bath must exactly equal heat losses; the heat input from the immersed heaters is varied by the controller which has a characteristic time constant for its response to a change in demand.

The heat losses from the bath are due to:

1 heating fluidising air
2 radiation from the top of the bath
3 conduction through the insulation
4 conduction along loads inserted into the bath
5 heating the mass of cold objects placed in the bath.

Changing any of these will affect the temperature of the bath, but it will recover under the controller's influence; this does mean, however, that after any parameter is changed or the load in the bath is changed, there is a delay before the bath temperature re-stabilises.

Start-Up

1. Check that the unit has been set up as described earlier and that required services are available.
2. Check that alumina level is correct and adjust if necessary. Never add new, cold alumina (which may contain moisture) to a hot bath.
   Should the fluidised bath be stored for long periods of time under damp or humid conditions, moisture may be absorbed by the alumina which is hydroscopic. To avoid violent fluidisation which occurs when damp alumina is heated above 100°C, operate the bath for a period of approximately 8 hours at 90°C prior to operation at elevated temperatures.
3. Check that fluidising air control valve and dust extraction control valve are both closed.
4. Connect bath to the electrical, and compressed air supplies.
5. Turn on mains power switch (19). The internal neon should illuminate.
6. Turn on dust extraction system switch (22), and the green lamp (20) should illuminate.
7. Open the fluidising air control valve (21) until the surface of the alumina rises and then starts to move with a gentle flowing action, like boiling cream. The amber heater light (20) should illuminate as should the controller when the fluidising air exceeds a preset pressure.
8. Set the desired operating temperature on the controller (16).
9. As the bath heats up, the indicated air flow for adequate fluidisation can be reduced - excess fluidising air does not improve performance, but does increase the risk of dust emission from the bath.
10. When the bath is at operating temperature, the controls should not be adjusted without good cause.

Calibration

1. When using the FFB-8 to calibrate thermal sensors such as thermocouples and platinum resistance thermometers, it is important to ensure that the working volume of the bath is thermally stable. Use an independent temperature sensor, such as a reference thermocouple, to check the temperature uniformity and stability, see Specification.
2. The temperature stability of the fluidised bath at any operating temperature may be improved by tuning the control parameters of the temperature controller to match the performance of the system under any set conditions. Adjustment details are contained within the manufacturers instruction manual for the Eurotherm temperature controller.
3. For precise calibration the actual temperature of the fluidised bath should be measured with an independent calibrated reference sensor; the temperature indicated by the temperature controller should only be used as a guide and not as an indication of absolute temperature.
4. The number of sensors calibrated in the fluidised bath at any one time should be kept to a minimum so as not to disturb the flow pattern within the bath. Typically up to 10 sensors of approximately ∅10 mm may be calibrated without loss of performance.
5. The probe plate supplied with the FFB-8 may be machined to allow the sensors being calibrated access to the bath. This probe plate should always be positioned above the surface of the bath in the probe plate carrier so as to inhibit the loss of fine alumina particles from the surface of the bath.
6. Techne are able to offer a work basket which ensures that the probes being calibrated are held within the working volume of the bath, alternatively custom built probe holders are available. Probe holders locate the sensors being calibrated at a known position within the bath and act as equalising blocks so that the basic isothermal properties of the fluidised bath are further enhanced.

Dead Bed Calibration

1. Temperature stability during calibration may be further improved by using a dead bed calibration technique. This technique involves heating the bath to the required calibration point, then allowing the temperature of the bath to stabilise for a period of approximately 20 minutes, dependent upon the actual calibration temperature and the thermal mass of the sensors being calibrated.
2. The fluidised bed is collapsed by cutting off the fluidising air to the FFB-8 so that the sensors being calibrated are surrounded by a solid bed of alumina which acts as a thermal insulator. After a period of approximately 2 minutes at set temperature a stability of 0.01°C can be achieved for a further period of approximately 8 minutes, dependent upon heat loss along the stem of the sensors being calibrated.
3. At the end of the required period of dead bed it is necessary to reconnect the fluidising air to the FFB-8.

Close Down

1. Turn off the mains power switch (19).
2. Close the fluidising air and nitrogen control valve (21).
3. Turn off the dust extraction system (22).
4. Disconnect the compressed air supply.
5. Disconnect the mains power.

SERVICING

Before any servicing is attempted the unit should be disconnected from the mains and allowed to cool down. In all cases maintenance and repair work should be undertaken only by a skilled technician. Untrained personnel should not attempt to dismantle the instrument.

Daily Maintenance (or as necessary)

Empty the cyclone collector bottle as follows (can be done whilst bath is hot):

1. Turn off the fluidisation air.
2. Turn off the dust extraction system.
3. Unscrew the bottle from the base of the cyclone unit.
4. Screw on the empty spare bottle.
5. Turn on the dust extraction system.
6. Turn on the fluidisation air until the bath is just fluidised.
7. Carefully and slowly empty the full bottle into the top of the bath. (Except for the first bottle from a new charge which should be thrown away). Note: During normal operation the collector bottle should only become partially full during an 8 hour period. An excessive amount of alumina in the collector bottle suggests that the fluidised bath has been overfilled with alumina, check the level in the bath. Add enough from the bottle to bring the bath to the correct level and keep the remainder as spare material.
8. Increase fluidisation up to the correct working level.
9. Check the filter and clean or replace if necessary, when the extraction system is switched off. (Note the screw and the filter may be hot).

Periodic Maintenance

The fluidised bath requires the following periodical inspection to be carried out to ensure trouble free operation:

The condition of the alumina should be checked to make sure that there are no lumps and, if practical, sieved occasionally. A fresh charge of alumina should be used if the medium is contaminated in any way.

Should the fluidised bath be stored for long periods of time under damp or humid conditions, moisture may be absorbed by the alumina which is hydroscopic. To avoid violent fluidisation which occurs when damp alumina is heated above 100°C, operate the bath for a period of approximately 8 hours at 90°C prior to operation at elevated temperatures. The heaters should be checked for discolouration, oxidation or to determine if any build up of alumina particles has taken place on the surface.

The condition of the porous plate should be checked to see whether there are any oil stains or discolourations: if so, and fluidisation is impaired, replace the porous plate.

The air supply filter should be checked to ensure that the auto drain system is working and that the filters are in good condition.

Fault Finding

The following guide has been prepared should a fault develop with the fluidised bath. The procedures laid down should be followed using only the specified replacement parts. If the fault cannot be located by using this guide, Techne carry full service facilities.

If the unit fails to operate, check the fuse, electrical and air supplies.

Fault	**Check**
Poor fluidisation	a) Unit not level b) Inadequate air flow c) Inadequate air supply d) Air filters blocked e) Defective air flow meter f) Bath over-filled with alumina g) Fluidisation restricted by large mass placed in bath h) Porous plate blocked
Poor temperature	It should be noted that in order to achieve good thermal conditions control within the fluidised bath, it is important that the bath is properly fluidised. If all the instructions have been followed concerning the fluidisation in the operating procedure, there could be a fault with: a) The temperature control unit. A separate leaflet is provided which covers fault finding and service of this unit. b) The Triac/Solid State Relay.
Power on but air controller does not illuminate	a) Check there is no restriction in the supply. Supply to the unit must be at 60 psi with 130 L/min flow. b) Check the blue silicone rubber tube, from the plenum chamber to the pressure switch, is in place. Check the stud in the centre of the plenum chamber is in place. c) Check the bath is filled with media to the correct level. d) With the extraction switch off, switch on the air supply, open the valve on the flowmeter until the float is at the top of the tube. e) If the float does not rise: 1 Check the air supply again. 2 Check the pipework for kinks and leaks. NOTE: The oil filter has a continuous bleed of air on the drain pipe. 3 Check the regulator in the unit has not been closed. NB. If the regulator is changed, air must be re-calibrated to 10psi.

f) If the float does rise, check the bed is fluidising.

g) If the bed does not fluidise:

1 Check for leaks in the pipework

2 Check for leaks in the blue silicone tube

h) If the bed does fluidise, switch on the extraction air.

i) Check that the flowmeter float does not drop more than 5 L/min.

j) If the float drops:

1 The air supply is insufficient

2 The air mover is out of adjustment

k) If the float does not drop, switch on the power with the mains switch.

l) Check the switch illuminates.

m) If the mains switch does not illuminate:

1 Check the mains supply

2 Check the fuse

3 Check the wiring

4 Check the switch

n) If the mains switch does illuminate check the controller display illuminates.

o) If the controller does not illuminat

1 Check the wiring

2 Check the micro switch is lifting (on the pressure switch).

3 Lift the micro switch lever; if the controller illuminates then there is insufficient air; start again.

4 If the controller does not illuminate when the micro switch is lifted the pressure switch is faulty or the controller is faulty.

5 Replace the pressure switch and test again.

6 If the fault persists replace the controller.

Component Access

REMEMBER THAT HIGH VOLTAGES ARE EXPOSED WHEN THE CASE IS REMOVED AND THE UNIT IS PLUGGED INTO THE POWER.

Index	Page	Component
	17	To drain the Alumina fluidising medium
	18	To replace the Thermocouple
	18	To replace the Heaters
	18	To replace the Controller
	19	To replace the Air Filters
	19	To replace the Porous Plate
	20	To replace the Flowmeter Tube
	20	To replace the Fluidisation pressure switch (57)
	20	To replace the Fuse
	20	To replace the Triac/SSR

To drain the alumina fluidising medium

This is best done when the bath is cool as hot alumina can cause severe burns.

Ensure that the fluidisation air is turned off at the valve on the flowmeter (21), remove the drain cap (23) situated at the bottom rear of the unit. CAUTION, CAP MAY BE HOT. If the flowmeter has not been turned off and the unit is connected to the air supply, a jet of alumina will be released when the cap is removed.

Fit the drain extension tube. Avoid over tightening. The bath may now be drained by very slowly turning on the fluidising air at the flowmeter until a steady flow of alumina is obtained. Hot alumina should be drained into a well insulated container of suitable material to avoid fire hazards. When the bath is empty remove the drain extension tube, clean the thread of the drain cap, and refit.

Note: Before replacing the thermocouple or the heaters the bath should be emptied of alumina, see para. 1 above. The air and electrical supplies must be disconnected at all times when servicing the system.

To Replace the Thermocouple

a) Remove the top panel (1) by removing the screw at the left hand bottom corner, push up and pull out the panel.

b) Remove the three screws securing the front panel (5) along the upper edge. DO NOT DISTURB SCREW WITH EARTH SYMBOL ALONGSIDE IT. Remove the knurled nut from the extraction air switch (22) and lower the panel.

c) Disconnect the thermocouple wires from the rear of the temperature controller (16) taking note of the polarity for reconnection.

d) Slacken the thermocouple lock nut (52) back about 10mm. Unscrew the parallel bush (50) and remove the thermocouple (51). Access may be improved by disconnecting the hose (31) from the air mover (32).

e) Reverse the operation for replacing the thermocouple ensuring that it does not touch the heater and that the sheath is clear of any electrical parts.

To Replace the Heaters

a) Remove the upper front panel (1) as above.
b) Turn the unit on its back to gain access to the heater terminations.
c) Disconnect the wiring from the heaters (47) and remove the nuts (45) and washers (46) from the heater unions.
d) Replace the unit on its feet and withdraw the heater through the top aperture.
e) Reverse the operation to replace the heater fitting new seal washers (44) to the heater union. It may be necessary to spring the heater in order to pass the terminations through the holes. Should the heater lay too close to the wall of the inner container at the bottom, pull it away gently.

To Replace the Controller

Units with Serial Number prior to /5:

To remove the controller from the panel open the small panel at the bottom of the front face of the controller and with a screwdriver turn the screw in the bottom right hand corner counter clockwise. The instrument will start to withdraw from the sleeve and once the screw has been turned to its furthest extent the instrument can be withdrawn by hand.

Units with Serial Number/5 onwards:

With a screwdriver turn the screw at bottom of the controller counter clockwise. The instruments will start to withdraw from the sleeve and once the screw has been turned to its furthest extent the instrument can be withdrawn by hand.

To replace the controller ease the instrument by hand into the sleeve to its furthest extent. About 10mm will be left protruding. With a screwdriver turn the screw in the bottom right hand corner clockwise until tight. The instrument will be pulled completely into the sleeve, engaging the rear terminals, it is then fully secured.

Should it be necessary to remove the sleeve, first remove the controller as above. Remove the top panel (1) by removing the screw at the left hand bottom corner, push up and pull out the panel. Remove the three screws securing the front panel (5) along the upper edge. DO NOT DISTURB SCREW WITH EARTH SYMBOL ALONGSIDE IT. Remove the knurled nut from the extraction air switch (22) and lower the panel. Remove wiring from the rear of the sleeve, loosen the two retaining screws until it is possible to lift the screws outwards and push the mounting clamps into the sleeve. Replacement of the sleeve is in the reverse order.

To Replace the Air filters

Access to the compressed air filters can be gained through the front panel as above or through the bottom of the unit. To replace the particle filter element (60) or the oil filter element (62) turn off the air supply. Unscrew the transparent filter bowl, then unscrew the filter element. Note when replacing the oil filter element the small O ring between the element and the housing should also be changed. Filter bowls should only by cleaned with soapy water DO NOT USE SOLVENTS.

When refitting filter bowls, ensure that the rubber seal is in place.

NOTE: REGULATORS ARE FACTORY SET AND SHOULD NOT BE ADJUSTED.

To Replace the Porous Plate

It should be noted that replacement of the porous plate is rarely necessary; however, should the plate become blocked or damaged the following instructions should be followed.

a) Empty the unit of alumina as in 1 above.
b) Remove the jar (13) and turn the unit on its back.
c) Disconnect the air line to the air supply point on the inside of the chassis (6) by unscrewing the knurled nut and pulling the plastic pipe clear.
d) Remove eight nut and lock washers holding the chassis (6) to the LH wrapper (2), RH wrapper (3) and central wrapper (55), one bolt and lock washer situated in the recess for the dust extraction jar (13), and two lock nuts on the stud of the plenum chamber (42). Pull chassis clear.
e) Remove 25 nuts, bolts and washers securing plenum chamber (42) to the inner container (41). Pull the plenum chamber clear and remove the porous plate (43).
f) Clean any sealant from the flanges of the plenum chamber and inner container. A seal of Red Hermetite should be placed on both of the above flanges when fitting a new porous plate. Fit the porous plate while the seal is still wet, ensure that the porous plate and plenum chamber are correctly aligned with the offset hole in the inner container assembly.
g) Refit the 25 nuts, bolts and washers and tighten them to a torque of 2.25-2.7 Nm (20-24 lb ins).
h) Reverse the operation for replacing the chassis.

To Replace the Flowmeter Tube

a) Remove the protective cover.
b) Remove the flow tube by first removing the plastic clip at the top of the flow tube, lift the flow tube up and remove the bottom of the tube clear of the flowmeter assembly. Pull the tube downwards from the top insert.
c) Fit the float with the pointed end down, into the tube.
d) Push the tube on to the top insert, line the tube with the bottom insert, pull the flow tube and the top insert down until the flow tube is fully engaged on the bottom insert, refit the plastic clip.
e) Refit the protective cover.

To Replace the Fluidisation pressure switch (57)

This is preset to cut off the electrical supply to the heater should the fluidisation air flow fall below 2 1/min. It is secured to the central wrapper (55) Remove the top panel (1) by removing the screw at the left hand bottom corner, push up and pull out the panel. Remove the three screws securing the front panel (5) along the upper edge. DO NOT DISTURB SCREW WITH EARTH SYMBOL ALONGSIDE IT. Remove the knurled nut from the extraction air switch (22) and lower the panel.

To Replace the Fuse

A high speed fuse (18) is fitted in the fuse holder (17) on the front panel (5).

To Replace the Triac/SSR

Remove the top panel (1) by removing the screw at the left hand bottom corner, push up and pull out the panel. Remove the three screws securing the front panel (5) along the upper edge. DO NOT DISTURB SCREW WITH EARTH SYMBOL ALONGSIDE IT. Remove the knurled nut from the extraction air switch (22) and lower the panel. Remove the wiring from the triac (24), and remove the retaining screws. Fit the new triac, first smearing it with heatsink compound. Re-fit the wires and replace the front panel.

SPARES LIST

Deascription	230V	200V
POROUS PLATE	6001557	6001557
TRIAC (Prior to Serial No / 5 on)	6008234	6008234
SSR (Serial No / 5 on)	6008457	6008457
FILTER ELEMENT PART.	6009131	6009131
FILTER ELEMENT OIL	6009132	6009132
FUSE	6008181	6008181
THERMOCOUPLE	6005282	6005282
HEATER	6007477	6007477
WASHER	6001081	6001081
FILTER EXHAUST	6007558	6007558
TUBE for FLOW CONTROLLER	6009120	6009120
CAPSULE for PRESSURE SWITCH	6000435	6000435
CONTROLLER (807)	6100713	6100713
CONTROLLER (2208L)	6104671	6104671
MAINS SWITCH	6500937	6500937

ACCESSORIES

Accessories supplied as standard

6003948	EXTENSION TUBE	1	NOT ILLUSTRATED
6007766	PROBE PLATE	1	

Accessories available for the FFB-8 are:

Probe holders (made to customers' requirements by Techne)

The FB-08 provides a calibration medium for a wide range of sensor shapes and sizes. However, in cases where there is a constant probe size, it is sometimes more convenient to use a probe holder as this provides a metallic thermal shunt so that the basic isothermal properties of the bath are further enhanced.

F7759	BASKET/PROBE PLATE
F5915	AIR PRESSURE REGULATOR/FILTER
F120D	AIR COMPRESSOR 220/240V

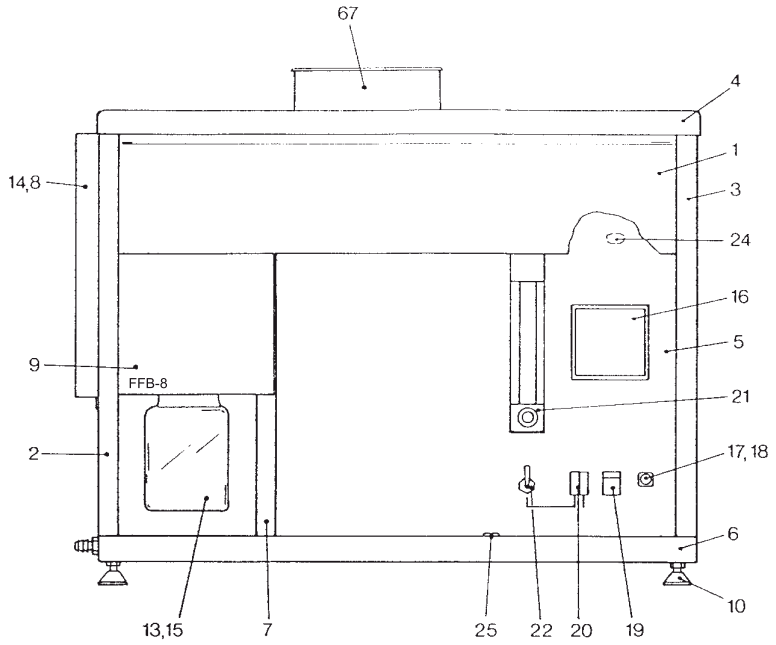

Front

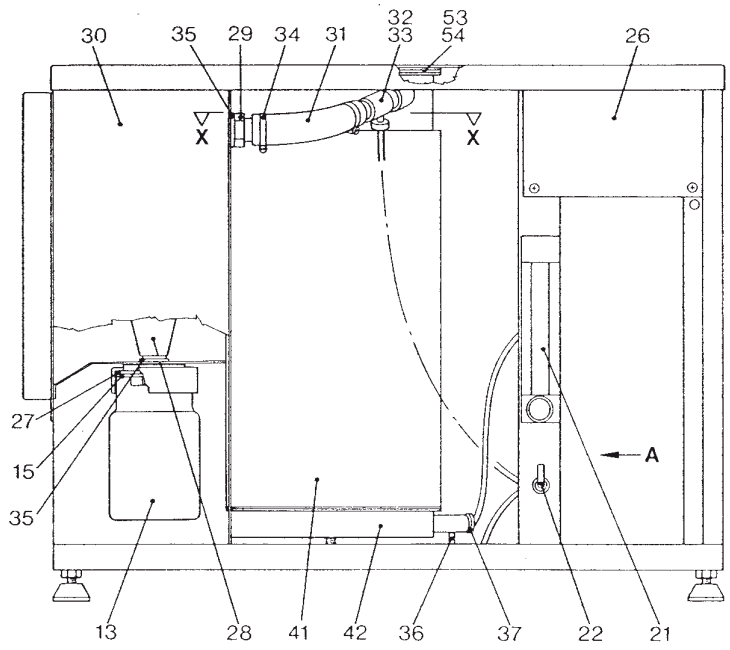

Front with the panels removed

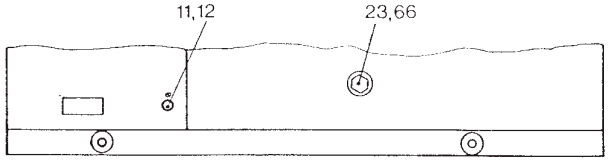

Part of Back

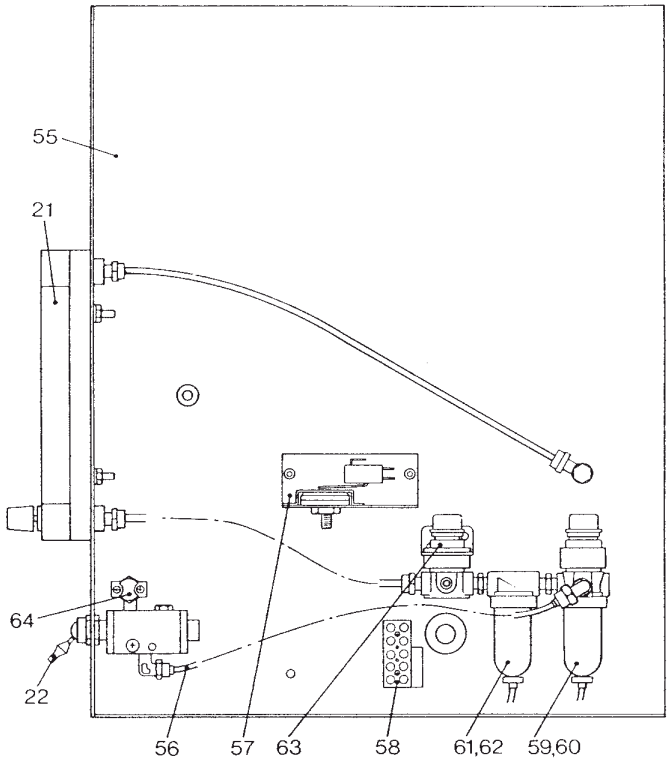

View on Arrow A

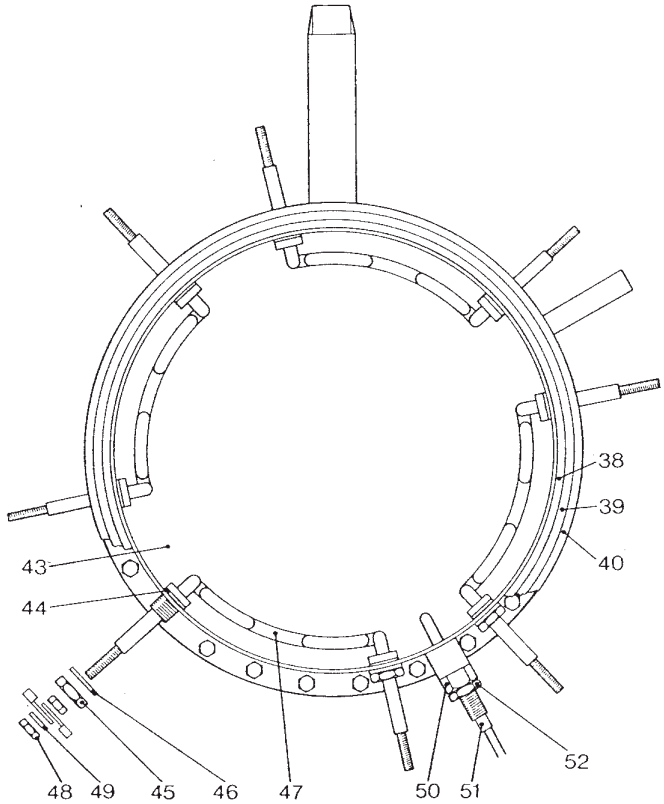

Section X–X

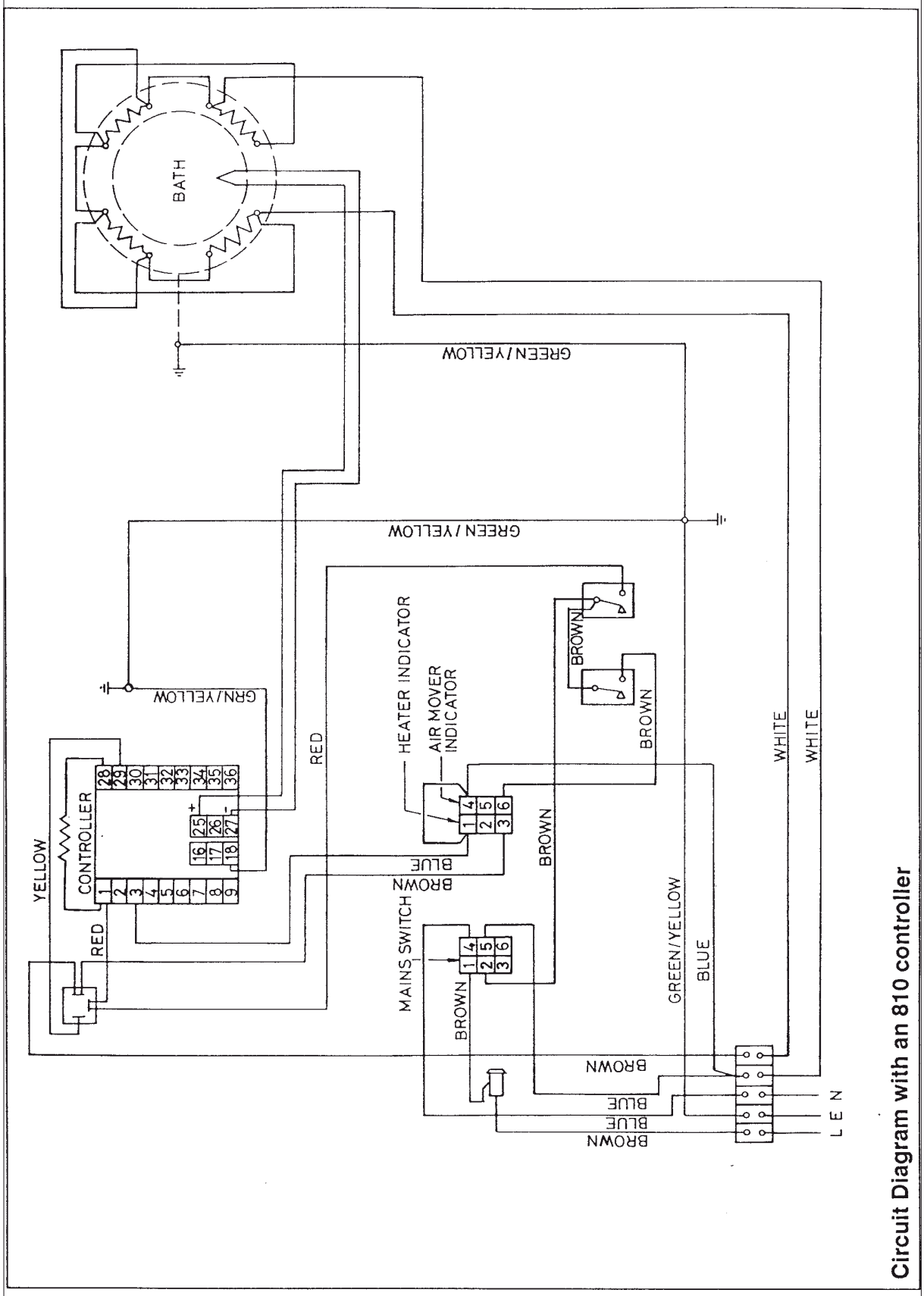

Circuit Diagram with an 810 controller

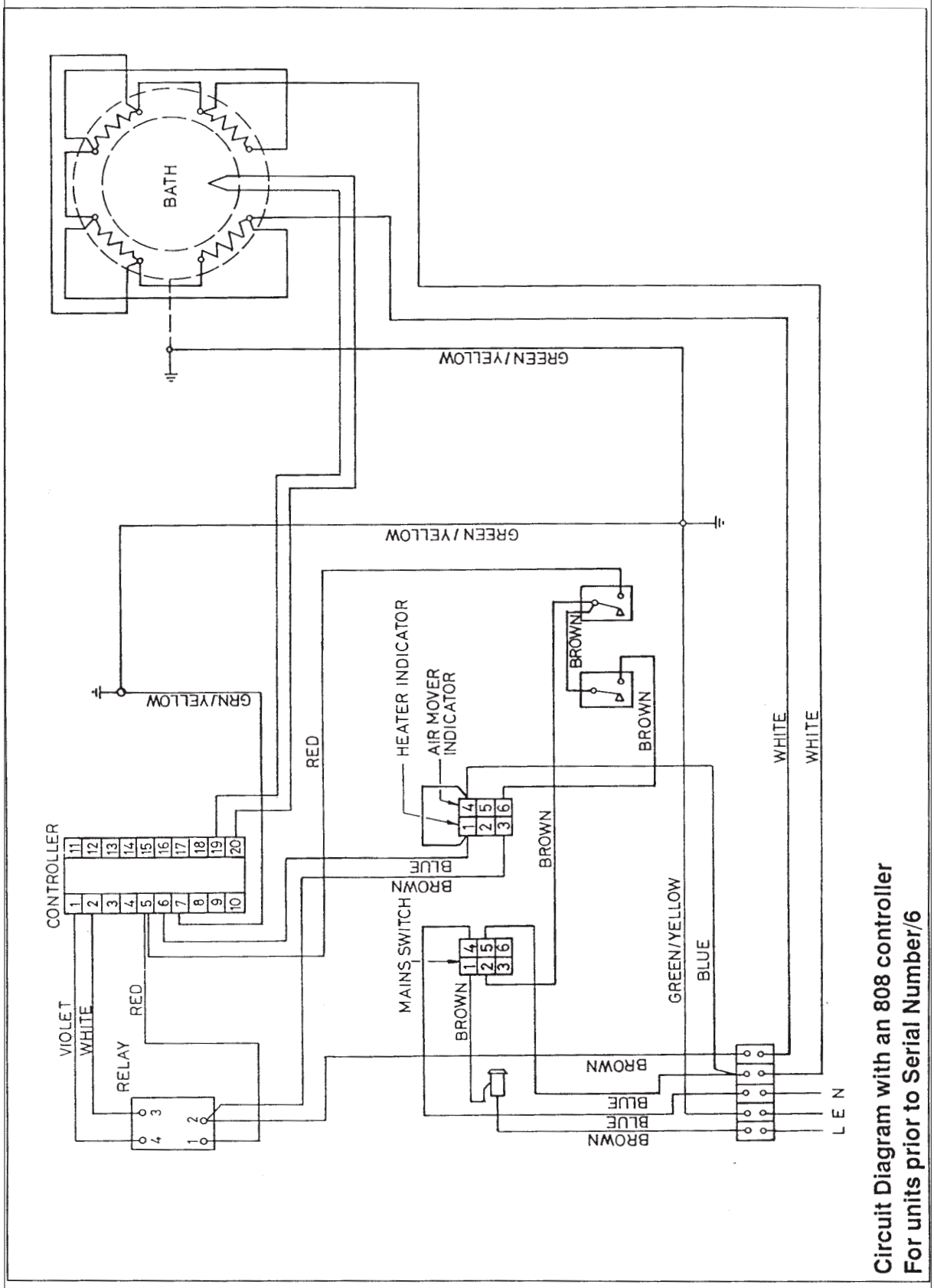

Circuit Diagram with an 808 controller
For units prior to Serial Number/6

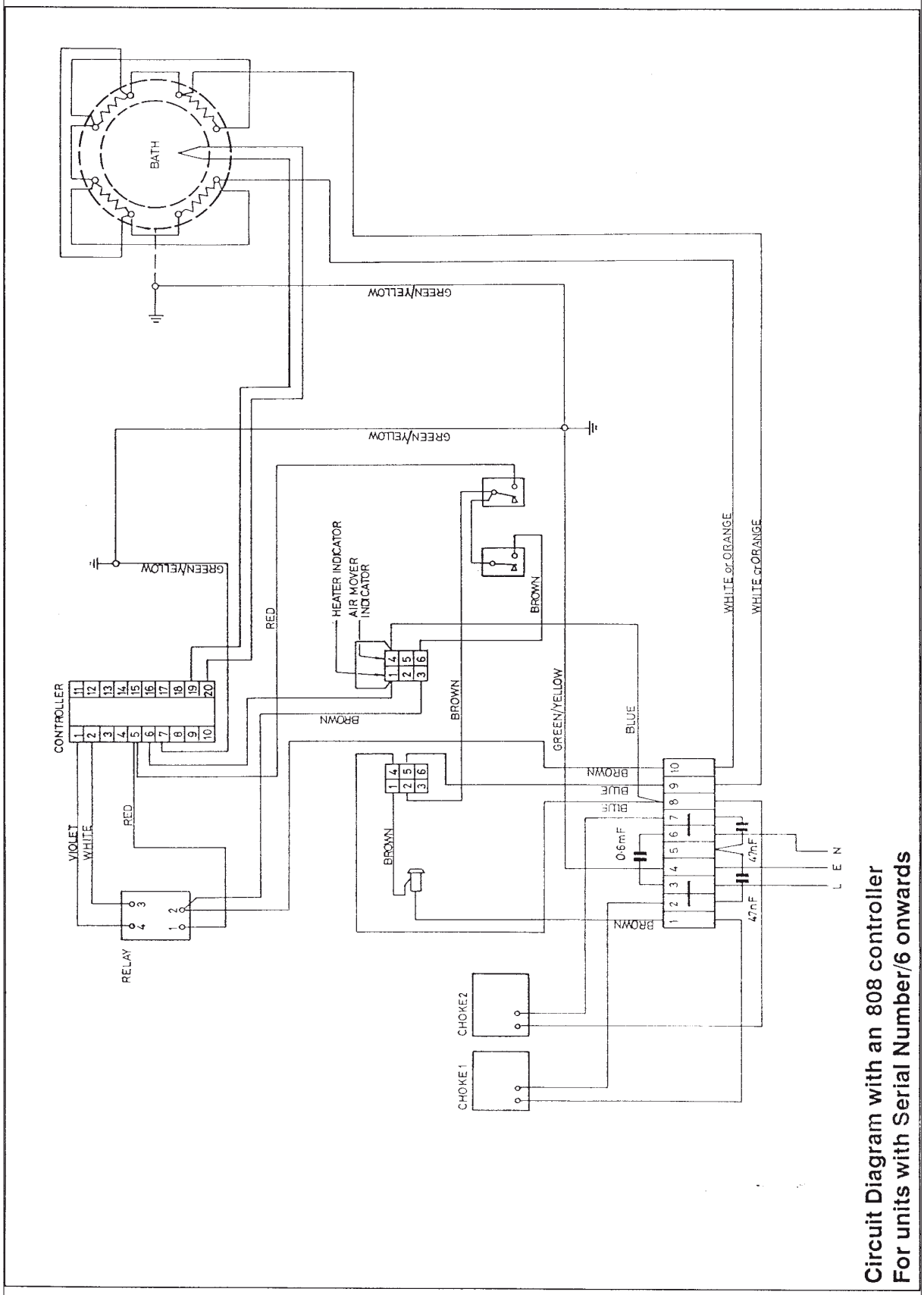

Circuit Diagram with an 808 controller
For units with Serial Number/6 onwards

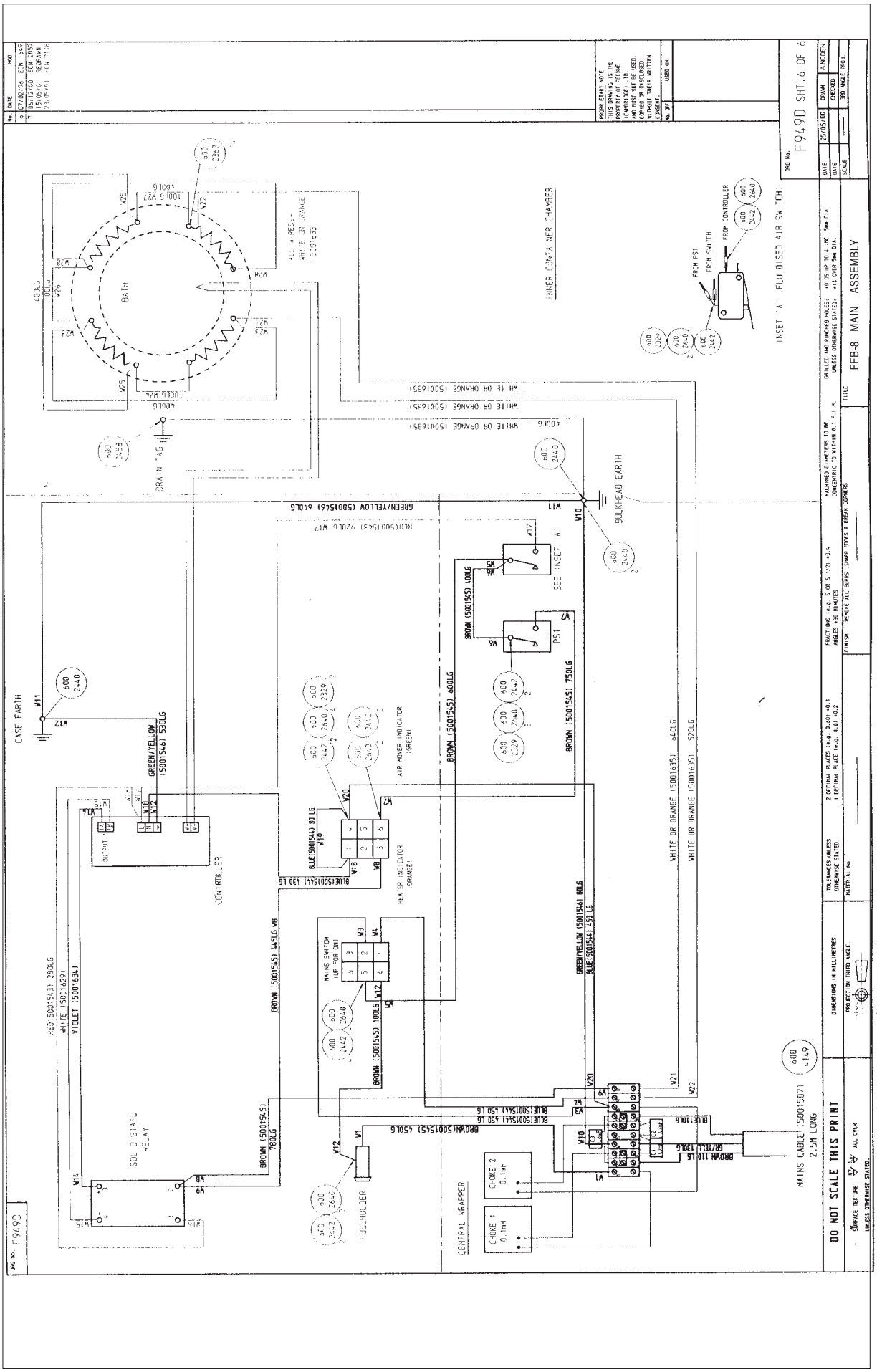
F949D SHT.6 OF 6
FFB-8 MAIN ASSEMBLY
INNER CONTAINER CHAMBER
INSET 'A' (FLUIDISED AIR SWITCH)
FROM PS1
FROM SWITCH
FROM CONTROLLER
BATH
DRAIN TAG
BULKHEAD EARTH
CASE EARTH
SEE INSET 'A'
PS1
AIR MOVER INDICATOR (GREEN)
HEATER INDICATOR (ORANGE)
CONTROLLER
MAINS SWITCH UP FOR ON
SOL D STATE RELAY
FUSEHOLDER
CHOKE 1 0.1mH
CHOKE 2 0.1mH
CENTRAL WRAPPER
MAINS CABLE (50015071) 2.5M LONG
DO NOT SCALE THIS PRINT

FFB-8 Fluidized bath
Frequently asked questions

How high should we fill the alumina?

When fluidized the alumina level should be six inches from the top surface of the bath at your maximum operating temperature. As pictured to the right the alumina is at the correct level when you just see the tops of the heaters. Note that the alumina does exhibit expansion with heat so you will need to verify the level at your operating temperature.

Should we put a cover on the bath to keep heat and alumina in?

With the extraction air on the bath should never be covered. A cover will create negative pressure inside the bath quickly pulling a lot of alumina out which will quickly fill up the jar, increase dusting and block the filter chamber. Always use the supplied collar and probe plate to obtain the best dust control and collection. The probe plate should be the basis for designing a holder for your devices or components to be immersed into the bath. A plate with a handle should be designed for use as a blank when the bath is not in use. A second handle could be used on the additional plate for lowering devices into the bath.

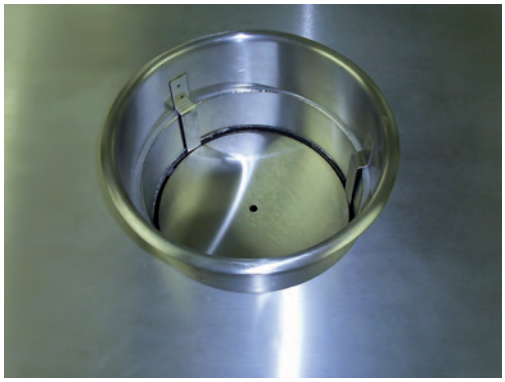

How often should the filter be changed?

We recommend that the filter and chamber be vacuumed out every 2 weeks with daily bath use. The filter should be replaced approximately every 4 months with daily bath use.

Does the dust collection jar fill up quickly?
The jar may fill up in an 8 to 12 hour period if the bath is operated at the higher temperatures (>450°C). Always empty the jar when the alumina reaches the 'shoulder' of it. Be careful when handling the jar to prevent chipping on the top; if chipped it will leak alumina into the surrounding area and should be replaced.

Can we shut the air and power off to the FFB-8 when done?
On the standard FFB-8 power can be shut off at any time. However the air supply must remain on with the bath fluidized until the temperature is below 200°C or damage may occur.

Will the FFB-8 bath operate on a 208VAC mains supply?
For effective heat up and performance we strongly recommend a mains voltage supply between 220 and 240VAC. A 208VAC supply will reduce the bath's power capacity by 25%. For 208VAC we suggest a boost transformer.

How do we set the Rotameter air flow rate on the standard FFB-8 when our inlet pressure is set at 60 PSI?
See the flow chart in the next page for recommended settings when using the standard FFB-8. Note that an over Fluidized bath can create more dusting in the general area and fill up the jar much quicker. Your air supply should deliver a minimum of 60 PSI at a maximum 4 CFM of flow.

WARRANTY/DISCLAIMER

OMEGA ENGINEERING, INC. warrants this unit to be free of defects in materials and workmanship for a period of **13 months** from date of purchase. OMEGA's WARRANTY adds an additional one (1) month grace period to the normal **one (1) year product warranty** to cover handling and shipping time. This ensures that OMEGA's customers receive maximum coverage on each product.

If the unit malfunctions, it must be returned to the factory for evaluation. OMEGA's Customer Service Department will issue an Authorized Return (AR) number immediately upon phone or written request. Upon examination by OMEGA, if the unit is found to be defective, it will be repaired or replaced at no charge. OMEGA's WARRANTY does not apply to defects resulting from any action of the purchaser, including but not limited to mishandling, improper interfacing, operation outside of design limits, improper repair, or unauthorized modification. This WARRANTY is VOID if the unit shows evidence of having been tampered with or shows evidence of having been damaged as a result of excessive corrosion; or current, heat, moisture or vibration; improper specification; misapplication; misuse or other operating conditions outside of OMEGA's control. Components in which wear is not warranted, include but are not limited to contact points, fuses, and triacs.

OMEGA is pleased to offer suggestions on the use of its various products. However, OMEGA neither assumes responsibility for any omissions or errors nor assumes liability for any damages that result from the use of its products in accordance with information provided by OMEGA, either verbal or written. OMEGA warrants only that the parts manufactured by it will be as specified and free of defects. OMEGA MAKES NO OTHER WARRANTIES OR REPRESENTATIONS OF ANY KIND WHATSOEVER, EXPRESS OR IMPLIED, EXCEPT THAT OF TITLE, AND ALL IMPLIED WARRANTIES INCLUDING ANY WARRANTY OF MERCHANTABILITY AND FITNESS FOR A PARTICULAR PURPOSE ARE HEREBY DISCLAIMED. LIMITATION OF LIABILITY: The remedies of purchaser set forth herein are exclusive, and the total liability of OMEGA with respect to this order, whether based on contract, warranty, negligence, indemnification, strict liability or otherwise, shall not exceed the purchase price of the component upon which liability is based. In no event shall OMEGA be liable for consequential, incidental or special damages.

CONDITIONS: Equipment sold by OMEGA is not intended to be used, nor shall it be used: (1) as a "Basic Component" under 10 CFR 21 (NRC), used in or with any nuclear installation or activity; or (2) in medical applications or used on humans. Should any Product(s) be used in or with any nuclear installation or activity, medical application, used on humans, or misused in any way, OMEGA assumes no responsibility as set forth in our basic WARRANTY/DISCLAIMER language, and, additionally, purchaser will indemnify OMEGA and hold OMEGA harmless from any liability or damage whatsoever arising out of the use of the Product(s) in such a manner.

RETURN REQUESTS/INQUIRIES

Direct all warranty and repair requests/inquiries to the OMEGA Customer Service Department. BEFORE RETURNING ANY PRODUCT(S) TO OMEGA, PURCHASER MUST OBTAIN AN AUTHORIZED RETURN (AR) NUMBER FROM OMEGA'S CUSTOMER SERVICE DEPARTMENT (IN ORDER TO AVOID PROCESSING DELAYS). The assigned AR number should then be marked on the outside of the return package and on any correspondence.

The purchaser is responsible for shipping charges, freight, insurance and proper packaging to prevent breakage in transit.

FOR **WARRANTY** RETURNS, please have the following information available BEFORE contacting OMEGA:

1. Purchase Order number under which the product was PURCHASED,
2. Model and serial number of the product under warranty, and
3. Repair instructions and/or specific problems relative to the product.

FOR **NON-WARRANTY** REPAIRS, consult OMEGA for current repair charges. Have the following information available BEFORE contacting OMEGA:

1. Purchase Order number to cover the COST of the repair,
2. Model and serial number of the product, and
3. Repair instructions and/or specific problems relative to the product.

OMEGA's policy is to make running changes, not model changes, whenever an improvement is possible. This affords our customers the latest in technology and engineering.

OMEGA is a registered trademark of OMEGA ENGINEERING, INC.

© Copyright 2011 OMEGA ENGINEERING, INC. All rights reserved. This document may not be copied, photocopied, reproduced, translated, or reduced to any electronic medium or machine-readable form, in whole or in part, without the prior written consent of OMEGA ENGINEERING, INC.

Where Do I Find Everything I Need for Process Measurement and Control? OMEGA...Of Course!

*Shop online at omega.com*sm

TEMPERATURE

- Thermocouple, RTD & Thermistor Probes, Connectors, Panels & Assemblies
- Wire: Thermocouple, RTD & Thermistor
- Calibrators & Ice Point References
- Recorders, Controllers & Process Monitors
- Infrared Pyrometers

PRESSURE, STRAIN AND FORCE

- Transducers & Strain Gages
- Load Cells & Pressure Gages
- Displacement Transducers
- Instrumentation & Accessories

FLOW/LEVEL

- Rotameters, Gas Mass Flowmeters & Flow Computers
- Air Velocity Indicators
- Turbine/Paddlewheel Systems
- Totalizers & Batch Controllers

pH/CONDUCTIVITY

- pH Electrodes, Testers & Accessories
- Benchtop/Laboratory Meters
- Controllers, Calibrators, Simulators & Pumps
- Industrial pH & Conductivity Equipment

DATA ACQUISITION

- Data Acquisition & Engineering Software
- Communications-Based Acquisition Systems
- Plug-in Cards for Apple, IBM & Compatibles
- Data Logging Systems
- Recorders, Printers & Plotters

HEATERS

- Heating Cable
- Cartridge & Strip Heaters
- Immersion & Band Heaters
- Flexible Heaters
- Laboratory Heaters

ENVIRONMENTAL MONITORING AND CONTROL

- Metering & Control Instrumentation
- Refractometers
- Pumps & Tubing
- Air, Soil & Water Monitors
- Industrial Water & Wastewater Treatment
- pH, Conductivity & Dissolved Oxygen Instruments

M5074/1211