1 YEAR WARRANTY

User's Guide

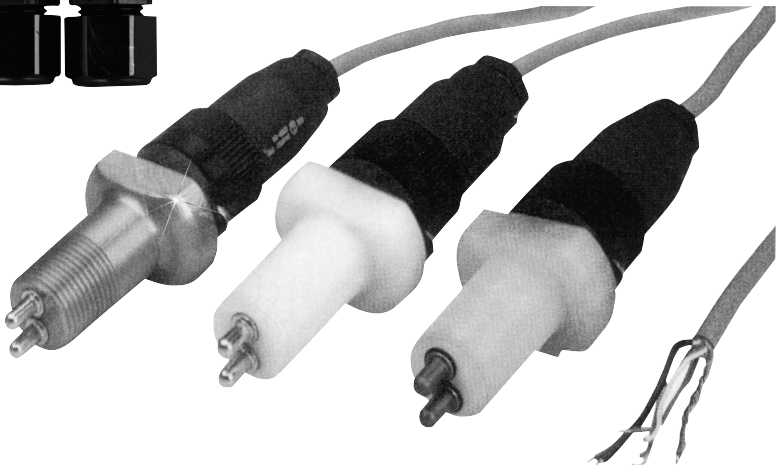

FSW-119 AND FSWC1/M1/T1
Flow Monitor

omega.com®
OMEGA®

OMEGAnet® Online Service www.omega.com	Internet e-mail info@omega.com

Servicing North America:

USA:
ISO 9001 Certified
One Omega Drive, Box 4047
Stamford CT 06907-0047
Tel: (203) 359-1660 FAX: (203) 359-7700
e-mail: info@omega.com

Canada:
976 Bergar
Laval (Quebec) H7L 5A1, Canada
Tel: (514) 856-6928 FAX: (514) 856-6886
e-mail: info@omega.ca

For immediate technical or application assistance:

USA and Canada:
Sales Service: 1-800-826-6342 / 1-800-TC-OMEGA®
Customer Service: 1-800-622-2378 / 1-800-622-BEST®
Engineering Service: 1-800-872-9436 / 1-800-USA-WHEN®
TELEX: 996404 EASYLINK: 62968934 CABLE: OMEGA

Mexico:
En Español: (001) 203-359-7803 e-mail: espanol@omega.com
FAX: (001) 203-359-7807 info@omega.com.mx

Servicing Europe:

Benelux:
Postbus 8034, 1180 LA Amstelveen, The Netherlands
Tel: +31 (0)20 3472121 FAX: +31 (0)20 6434643
Toll Free in Benelux: 0800 0993344
e-mail: sales@omegaeng.nl

Czech Republic:
Frystatska 184, 733 01 Karviná, Czech Republic
Tel: +420 (0)59 6311899 FAX: +420 (0)59 6311114
Toll Free: 0800-1-66342 e-mail: info@omegashop.cz

France:
11, rue Jacques Cartier, 78280 Guyancourt, France
Tel: +33 (0)1 61 37 2900 FAX: +33 (0)1 30 57 5427
Toll Free in France: 0800 466 342
e-mail: sales@omega.fr

Germany/Austria:
Daimlerstrasse 26, D-75392 Deckenpfronn, Germany
Tel: +49 (0)7056 9398-0 FAX: +49 (0)7056 9398-29
Toll Free in Germany: 0800 639 7678
e-mail: info@omega.de

United Kingdom:
ISO 9002 Certified
One Omega Drive, River Bend Technology Centre
Northbank, Irlam, Manchester
M44 5BD United Kingdom
Tel: +44 (0)161 777 6611 FAX: +44 (0)161 777 6622
Toll Free in United Kingdom: 0800-488-488
e-mail: sales@omega.co.uk

It is the policy of OMEGA to comply with all worldwide safety and EMC/EMI regulations that apply. OMEGA is constantly pursuing certification of its products to the European New Approach Directives. OMEGA will add the CE mark to every appropriate device upon certification.

WARNING: These products are not designed for use in, and should not be used for, human applications.

Please follow these installation, connection and adjustment instructions carefully. Failure to comply with these instructions or misuse of this equipment will void your warranty.

⚠ Equipment installation, connection and adjustment by qualified personnel only!

NOTES:

1 Description

This Single Point Flow Monitor is designed to monitor the flow of liquids and gases.

The system is made up of monitoring head (M) with flange connector (FC), cable (C) and control unit (A), see fig. 1.

Important operational safety and reliability enhancing features designed and built into these units include:

- Calorimetric flow monitoring, which avoids the need for moving parts in the flow stream.
- The desired MIN or MAX switch point is steplessly adjustable and is clearly indicated by dual color LED (red/green).
- Medium selector switch (MS) with three settings (water, oil, air).
- With either no delay, or with a 60 a switch-on delay or 10 a change over delay.

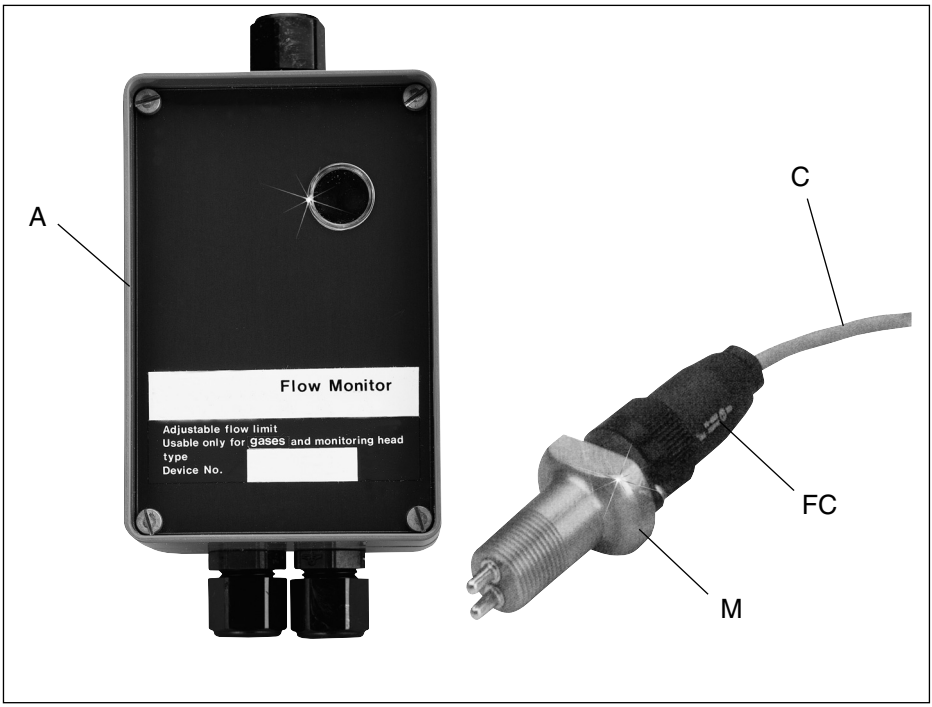

2 Technical data

Flow rate range:

Liquids	10 mm/s (0.39 inch/s) minimum
	2 m/s (6.6 Us) maximum
Gases	0.5 m/s (20 inch/s) minimum
	50 m/s If 64 Us) maximum

Temperature range:

of the medium	-25°C to +100°C (-13°F to +212°F)
of the control unit	25°C to +50°C (-13°F to +122°F)

Pressure resistance
of the monitoring head: 250 bar/3675 PSI

Response delay

Water	approx. 2 s*
Oil	approx: 4 s*
Air	approx. 7 s*

* Delay with the switch point set to 1 m/s (3.3 ft./s) and the flow rate at 2 m/s (6.6 ft./s), after a sudden complete flow stoppage.

Degree of protection:

Monitoring head with cable IP 67

Control unit IP 65

Input voltage: AC 230 V (+1 0%/-1 5%)
AC 115 V (+10%/-15%)
AC 24 V (+1 0%/-l 5%)
DC24V±10%

CE-mark to demonstrate compliance with applicable directive

3 Monitoring head installation

1. Check that the monitoring head type is suitable for the FSW-119 for water, oil, air types -C1, -M1, -T1
2. For best performance the monitoring head should be installed in the pipeline in accordance with the following conditions (see fig. 2).

a. The monitoring head should be installed only in a straight section of piping. There should be a distance of at least 10 pipe diameters before the monitoring head and 5 pipe diameters after the monitoring head before or after any bends and changes in pipe diameter, to avoid any effects of turbulence.

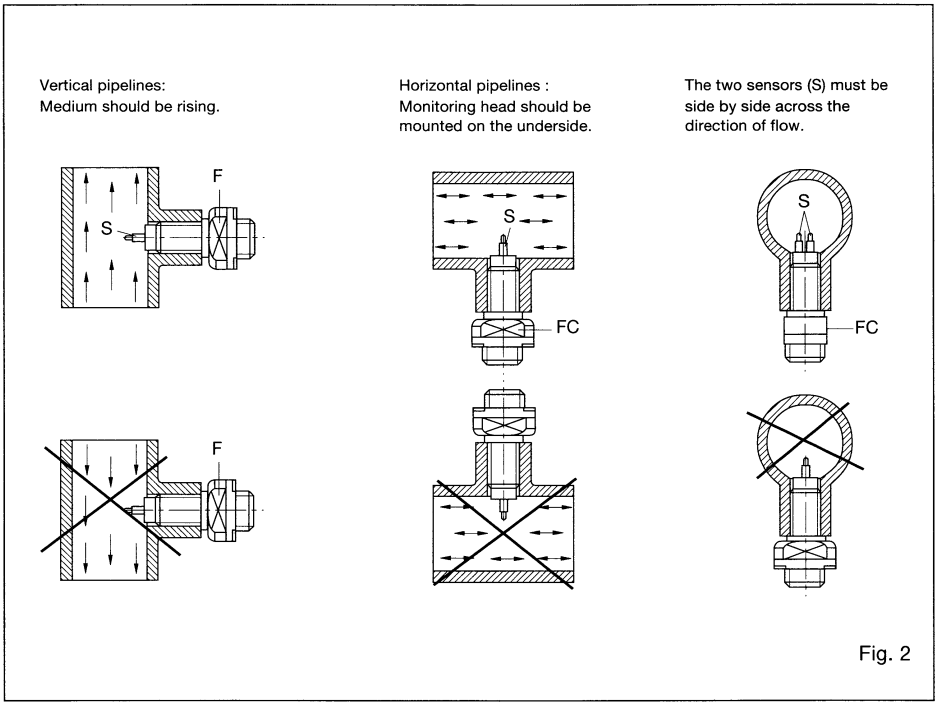

Fig. 2

b. In the case of vertical pipelines the monitoring head should be installed where the flow is rising, if possible.

c. For horizontal pipelines the monitoring head should be mounted on the underside of the line (suspended)

d. Avoid installing the monitoring head in known areas of high electrical inductance, capacitance, or high-frequency electromagnetic fields.

NOTE

If gases are the medium to be monitored, the mounting attitude of the monitoring head is unimportant in either vertical or horizontal pipelines.

3. The monitoring head should be screwed into the pipeline far enough to ensure that the sensors (S) are positioned fully in the flow stream (see fig. 2). However, care should also be taken that the sensor is not screwed in too far, thus causing an undue restriction in the pipe bore.

CAUTION

The two sensors (S) on the monitoring head must be aligned side by side directly across the direction of flow. The sensors are correctly positioned when the wrench flats (FC) are aligned parallel with the pipeline.
Do not overtighten.

4 Control unit installation

CAUTION

Avoid installing the monitoring head in known areas of high electrical inductance, capacitance, or high-frequency electromagnetic fields.

1. Loosen the retaining screws and remove the cover of the housing.
2. Mount the control unit in the desired location using the two screw holes provided in the base.
3. Replace the cover and tighten the retaining screws.

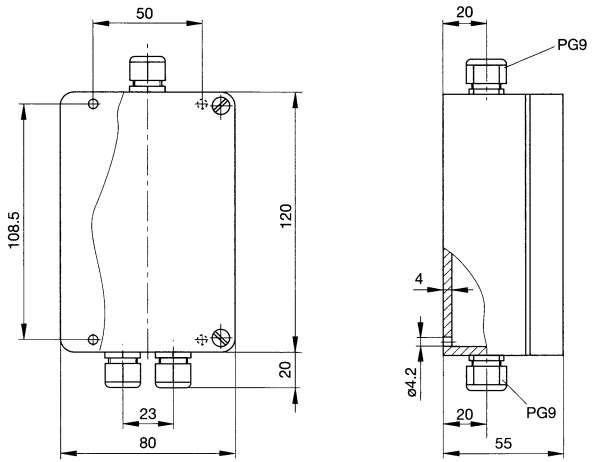

Fig. 3

5 Electrical connection

CAUTION

Check that the supply voltage corresponds with the voltage rating shown on the system.
If the standard length of the monitoring head cable is insufficient, longer cables are available to order up to a maximum of 100 m (328 ft.). Use only shielded cable.

1. Loosen the retaining screws and remove the cover of the housing.
2. Feed the supply input cable and relay connecting cable through the appropriate cable gland.
3. Connect the supply input cable to terminals 1 and 2, and the relay connecting cable to terminals 3 ... 5.
4. Use cable fasteners to eliminate cable displacement.
5. Plug the cable to the monitoring head and tighten with caution. Do not overtighten.
6. Connect power supply.

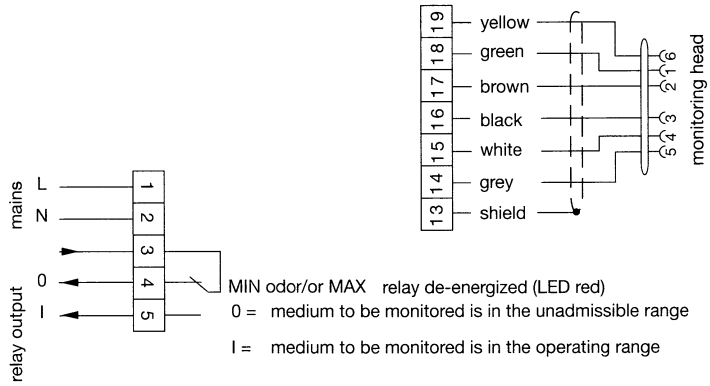

Fig. 4

6 Adjustment of flow response value

CAUTION

Ensure flow monitor has been correctly installed and connected in accordance with pares. 3, 4 and 5. l
Read the entire section including notes before starting adjustment.

Condition as delivered:

MIN-function factory preset to water, with no delay.

1. Start by bringing the system to the critical flow rate at which the flow monitor should respond and to its normal operating temperature and allow it to reach thermal stabilization. This takes at least 5 minutes for liquids and 15 minutes for gases.

CAUTION

Care should be taken to ensure that the flow is continuous and laminar, and for liquids free of bubbles (doesn't apply when monitoring foam).

2. Set medium selector switch (MS)(see fig. 5) to

position I = for water or media with similar thermal conductivities

position II = for oil or media with similar thermal conductivities

position III = for air or gases of similar thermal conductivities

3. Select either the MIN or MAX function by means of selector switch (FS), see fig. 5.
4. To facilitate flow response setting leave the delay switch (V1 and V2, fig. 5) in the condition as delivered (with no delay = V1 closed, V2 open).
5. The dual color LED (L) on the control unit indicates the position of the flow switch point.

With **MIN function** selected:

GREEN = flow rate is above the set response value.
RED = flow rate is at or below the set response value.

With **MAX function** selected:

GREEN = flow rate is **below** the set response value.
RED = flow rate is **at or above** the set response value.

6. To adjust the switching point, turn the flow adjustment potentiometer screw (R) to the exact point the LED changes:

MIN-function:

- from GREEN to RED
  - turn the screw clockwise
- from RED to GREEN
  - turn the screw counterclockwise

MAX-function:

- from GREEN to RED
  - turn the screw counterclockwise
- from RED to GREEN
  - turn the screw clockwise

Repeat this procedure several times to ensure correct adjustment.

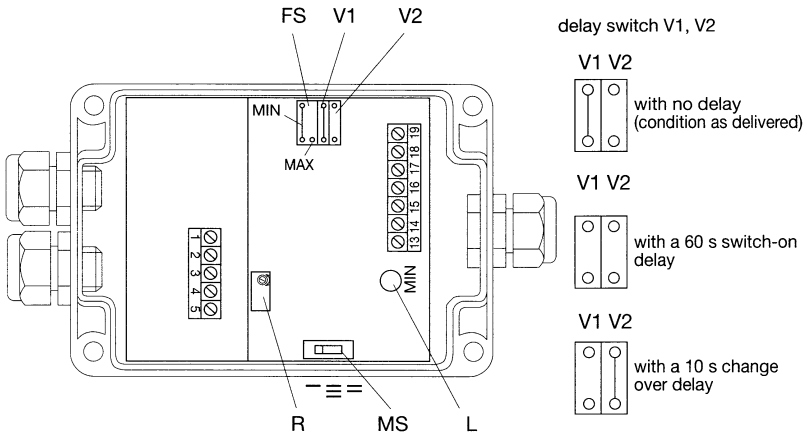

Fig. 5

CAUTION

If the switch point cannot be set when the medium selector switch (MS) is in position 11 or III, the switch should be set to the next lower position.

7. If required, select the desired delay by means of switch (V1) for switch-on delay or switch (V2) for change over delay, from green to red.
8. Replace cover and tighten the retaining screws.

7 Maintenance

OMEGA's Flow Monitors are virtually maintenance free. However:

a. The monitoring head sensors must be kept free of deposits.

b. Avoid damaging the sensors during cleaning.

When first installed the monitoring head should be checked periodically to see if cleaning is required until an operating pattern is established.

8 Operating difficulties

Problem: Incorrect switching

Solution:

- Avoid bubbles in the medium.
- Ensure monitoring head has been correctly installed in accordance with para. 3.
- Adjust the switch point to permit a greater differential from the normal flow rate, particularly in the event of a wide temperature range in the medium.
- Remove the monitoring head and clean the sensors.

Problem: Switch point cannot be adjusted.

Solution:

- Verify position of the medium selector switch (MS) and set the next lower position, if required (see para 6.6 - Caution).

NOTES:

WARRANTY/DISCLAIMER

OMEGA ENGINEERING, INC. warrants this unit to be free of defects in materials and workmanship for a period of **13 months** from date of purchase. OMEGA's Warranty adds an additional one (1) month grace period to the normal **one (1) year product warranty** to cover handling and shipping time. This ensures that OMEGA's customers receive maximum coverage on each product.

If the unit malfunctions, it must be returned to the factory for evaluation. OMEGA's Customer Service Department will issue an Authorized Return (AR) number immediately upon phone or written request. Upon examination by OMEGA, if the unit is found to be defective, it will be repaired or replaced at no charge. OMEGA's WARRANTY does not apply to defects resulting from any action of the purchaser, including but not limited to mishandling, improper interfacing, operation outside of design limits, improper repair, or unauthorized modification. This WARRANTY is VOID if the unit shows evidence of having been tampered with or shows evidence of having been damaged as a result of excessive corrosion; or current, heat, moisture or vibration; improper specification; misapplication; misuse or other operating conditions outside of OMEGA's control. Components which wear are not warranted, including but not limited to contact points, fuses, and triacs.

OMEGA is pleased to offer suggestions on the use of its various products. However, OMEGA neither assumes responsibility for any omissions or errors nor assumes liability for any damages that result from the use of its products in accordance with information provided by OMEGA, either verbal or written. OMEGA warrants only that the parts manufactured by it will be as specified and free of defects. OMEGA MAKES NO OTHER WARRANTIES OR REPRESENTATIONS OF ANY KIND WHATSOEVER, EXPRESS OR IMPLIED, EXCEPT THAT OF TITLE, AND ALL IMPLIED WARRANTIES INCLUDING ANY WARRANTY OF MERCHANTABILITY AND FITNESS FOR A PARTICULAR PURPOSE ARE HEREBY DISCLAIMED. LIMITATION OF LIABILITY: The remedies of purchaser set forth herein are exclusive, and the total liability of OMEGA with respect to this order, whether based on contract, warranty, negligence, indemnification, strict liability or otherwise, shall not exceed the purchase price of the component upon which liability is based. In no event shall OMEGA be liable for consequential, incidental or special damages.

CONDITIONS: Equipment sold by OMEGA is not intended to be used, nor shall it be used: (1) as a "Basic Component" under 10 CFR 21 (NRC), used in or with any nuclear installation or activity; or (2) in medical applications or used on humans. Should any Product(s) be used in or with any nuclear installation or activity, medical application, used on humans, or misused in any way, OMEGA assumes no responsibility as set forth in our basic WARRANTY/DISCLAIMER language, and, additionally, purchaser will indemnify OMEGA and hold OMEGA harmless from any liability or damage whatsoever arising out of the use of the Product(s) in such a manner.

RETURN REQUESTS/INQUIRIES

Direct all warranty and repair requests/inquiries to the OMEGA Customer Service Department. BEFORE RETURNING ANY PRODUCT(S) TO OMEGA, PURCHASER MUST OBTAIN AN AUTHORIZED RETURN (AR) NUMBER FROM OMEGA'S CUSTOMER SERVICE DEPARTMENT (IN ORDER TO AVOID PROCESSING DELAYS). The assigned AR number should then be marked on the outside of the return package and on any correspondence.

The purchaser is responsible for shipping charges, freight, insurance and proper packaging to prevent breakage in transit.

FOR **WARRANTY** RETURNS, please have the following information available BEFORE contacting OMEGA:

1. Purchase Order number under which the product was PURCHASED,
2. Model and serial number of the product under warranty, and
3. Repair instructions and/or specific problems relative to the product.

FOR **NON-WARRANTY** REPAIRS, consult OMEGA for current repair charges. Have the following information available BEFORE contacting OMEGA:

1. Purchase Order number to cover the COST of the repair,
2. Model and serial number of the product, and
3. Repair instructions and/or specific problems relative to the product.

OMEGA's policy is to make running changes, not model changes, whenever an improvement is possible. This affords our customers the latest in technology and engineering.

Where Do I Find Everything I Need for Process Measurement and Control? OMEGA...Of Course!

Shop online at www.omega.com

TEMPERATURE

- Thermocouple, RTD & Thermistor Probes, Connectors, Panels & Assemblies
- Wire: Thermocouple, RTD & Thermistor
- Calibrators & Ice Point References
- Recorders, Controllers & Process Monitors
- Infrared Pyrometers

PRESSURE, STRAIN AND FORCE

- Transducers & Strain Gages
- Load Cells & Pressure Gages
- Displacement Transducers
- Instrumentation & Accessories

FLOW/LEVEL

- Rotameters, Gas Mass Flowmeters & Flow Computers
- Air Velocity Indicators
- Turbine/Paddlewheel Systems
- Totalizers & Batch Controllers

pH/CONDUCTIVITY

- pH Electrodes, Testers & Accessories
- Benchtop/Laboratory Meters
- Controllers, Calibrators, Simulators & Pumps
- Industrial pH & Conductivity Equipment

DATA ACQUISITION

- Data Acquisition & Engineering Software
- Communications-Based Acquisition Systems
- Plug-in Cards for Apple, IBM & Compatibles
- Datalogging Systems
- Recorders, Printers & Plotters

HEATERS

- Heating Cable
- Cartridge & Strip Heaters
- Immersion & Band Heaters
- Flexible Heaters
- Laboratory Heaters

ENVIRONMENTAL MONITORING AND CONTROL

- Metering & Control Instrumentation
- Refractometers
- Pumps & Tubing
- Air, Soil & Water Monitors
- Industrial Water & Wastewater Treatment
- pH, Conductivity & Dissolved Oxygen Instruments

M0600A/0303